0.1 A Beta

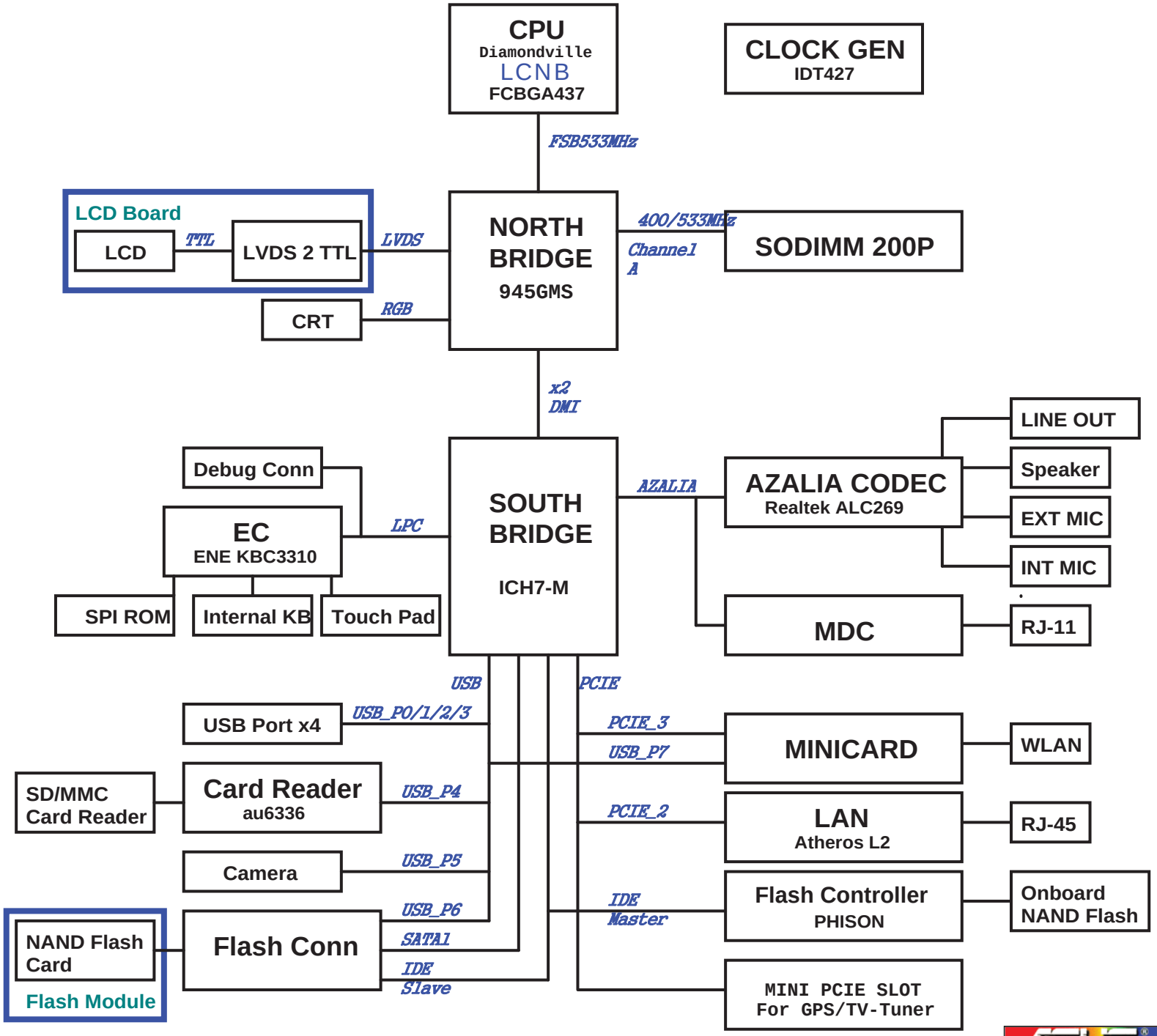

ASUSTek Computer Inc.

Title : Cover Page

Engineer: Henry_Yang

Size	Project Name	Rev
A3	P703	1.2G

Date: Tuesday, December 09, 2008 Sheet 1 of 51

http://hobi-elektronika.net

ICH7M GPIO DEFAULT&NOW SETTING

Pin	Pin Name	Type	Tolerance	Powe Well	Default	Now Setting
AB18	GPIO0/BM_BUSY#	I/O	3.3V	CORE	GPI	BM_BUSY#
C8	GPIO1/REQ5#	I/O	5V	CORE	GPI	REQ5#
G8	GPIO2/PIRQE#	I/OD	5V	CORE	GPI	PIRQE#
F7	GPIO3/PIRQF#	I/OD	5V	CORE	GPI	PIRQF#
F8	GPIO4/PIRQG#	I/OD	5V	CORE	GPI	PIRQG#
G7	GPIO5/PIRQH#	I/OD	5V	CORE	GPI	PIRQH#
AC21	GPIO6	I/O	3.3V	CORE	GPI	GPI,No Function,10K Pull +3VS
AC18	GPIO7	I/O	3.3V	CORE	GPI	GPO,WLAN_LED
E21	GPIO8	I/O	3.3V	Resume	GPI	GPI,EXTSMI#
E20	GPIO9	I/O	3.3V	Resume	GPI	GPI,No Function,10K Pull +3VS
A20	GPIO10	I/O	3.3V	Resume	GPI	GPO,WLAN_ON#
B23	GPIO11/SMBALERT#	I/O	3.3V	Resume	Native	SMBALERT#
F19	GPIO12	I/O	3.3V	Resume	GPI	GPI,KBC_SCI#
E19	GPIO13	I/O	3.3V	Resume	GPI	GPO,VCCP_DOWN
R4	GPIO14	I/O	3.3V	Resume	GPI	GPO,1.5VS_DOWN
E22	GPIO15	I/O	3.3V	Resume	GPI	GPI,No Function,10K Pull +3VSUS
AC22	GPIO16/DPRSLVR	I/O	3.3V	CORE	Native	DPRSLVR
D8	GPIO17/GNT5#	I/O	3.3V	CORE	GPO	BIOS_SEL1
AC20	GPIO18/STPPCI#	I/O	3.3V	CORE	GPO	STP_PCI#
AH18	GPIO19/SATA1GP	I/O	3.3V	CORE	GPI	GPI,No Function,10K Pull +3VS
AF21	GPIO20/STPCPU#	I/O	3.3V	CORE	GPO	STP_CPU#
AF19	GPIO21/SATA0GP	I/O	3.3V	CORE	GPI	GPI,No Function,10K Pull +3VS
A13	GPIO22/REQ4#	I/O	3.3V	CORE	Native	REQ4#
AA5	GPIO23/LDRQ1#	I/O	3.3V	CORE	Native	LDRQ1#
R3	GPIO24	I/O	3.3V	Resume	GPO	GPO,MINICARD1_EN#
D20	GPIO25	I/O	3.3V	Resume	GPO	GPO,DUAL_DOWN

Pin	Pin Name	Type	Tolerance	Powe Well	Default	Now Setting
A21	GPIO26	I/O	3.3V	Resume	GPO	GPO,VCORE_DOWN
B21	GPIO27	I/O	3.3V	Resume	GPO	GPO,CARD_READER_EN#
E23	GPIO28	I/O	3.3V	Resume	GPO	GPO,MODEM_EN#
C3	GPIO29/OC5#	I/O	3.3V	Resume	Native	OC5#
A2	GPIO30/OC6#	I/O	3.3V	Resume	Native	OC6#
B3	GPI031/OC7#	I/O	3.3V	Resume	Native	OC7#
AG18	GPIO32/CLKRUN#	I/O	3.3V	CORE	GPO	CLKRUN#
AC19	GPIO33/AZ_DOCK_EN#	I/O	3.3V	CORE	GPO	GPO,No Function,NC
U2	GPIO34/AZ_DOCK_RST#	I/O	3.3V	CORE	GPO	GPO,No Function,NC
AD21	GPIO35	I/O	3.3V	CORE	GPO	GPO,CAMERA_EN
AH19	GPIO36/SATA2GP	I/O	3.3V	CORE	GPI	GPI,No Function,10K Pull +3VS
AE19	GPIO37/SATA3GP	I/O	3.3V	CORE	GPI	GPI,PCB_ID0
AE20	GPIO38	I/O	3.3V	CORE	GPI	GPI,PCB_ID1
AD20	GPIO39	I/O	3.3V	CORE	GPI	GPI,PCB_ID2
NA	GPIO40	NA	NA	NA	NA	NA
NA	GPIO41	NA	NA	NA	NA	NA
NA	GPIO42	NA	NA	NA	NA	NA
NA	GPIO43	NA	NA	NA	NA	NA
NA	GPIO44	NA	NA	NA	NA	NA
NA	GPIO45	NA	NA	NA	NA	NA
NA	GPIO46	NA	NA	NA	NA	NA
NA	GPIO47	NA	NA	NA	NA	NA
A14	GPIO48/GNT4#	I/O	3.3V	CORE	Native	BIOS_SEL0
AG24	GPIO49/CPUPWRGD	I/O	V_CPU_IO	V_CPU_IO	Native	CPUPWRGD

http://hobi-elektronika.net

BLUE Anum FOR ADAPTER
YELLOW Bnum FOR BATTERY ONLY
GREEN FOR BOTH ADAPTER AND BATTERY

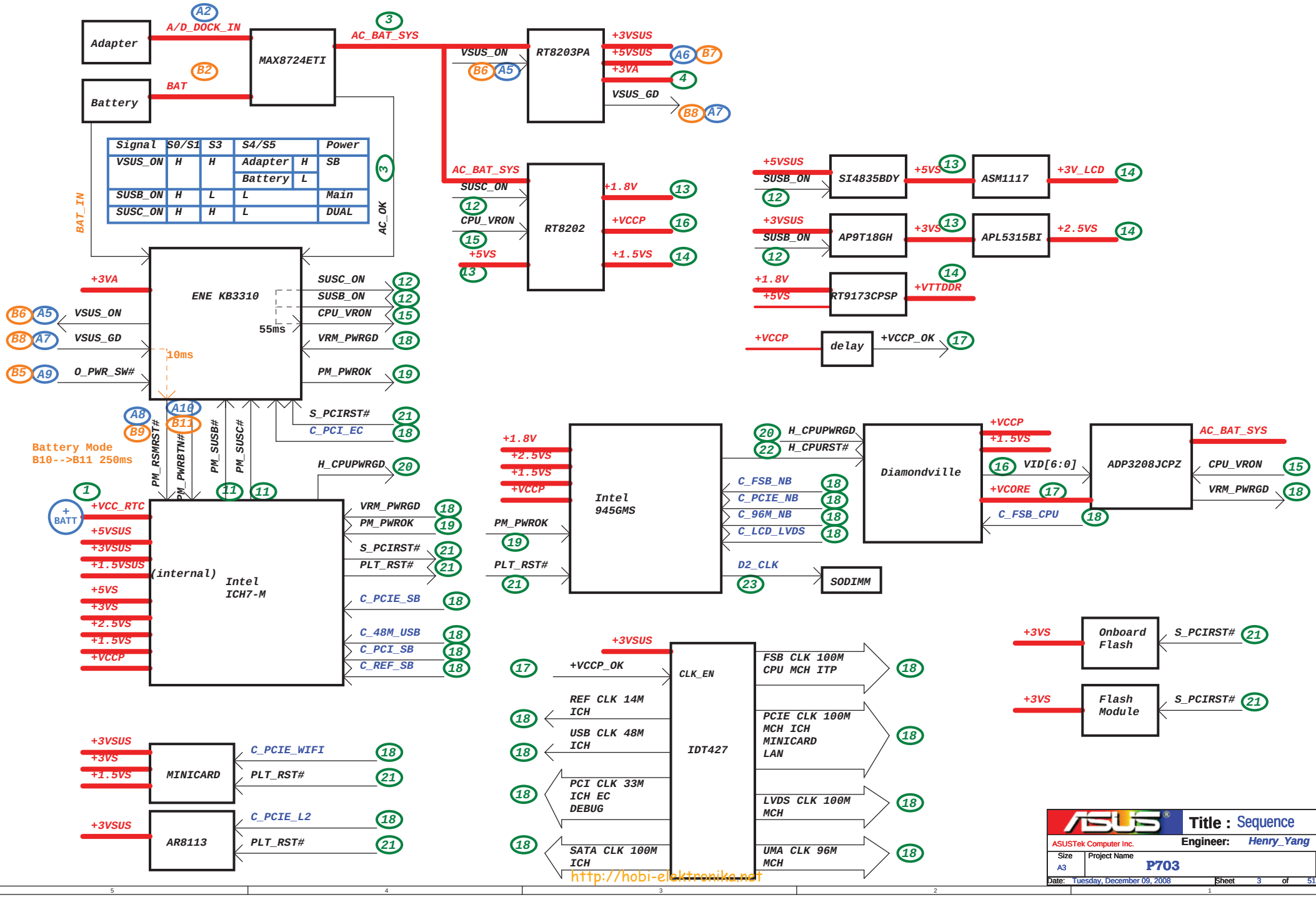

Signal	S0/S1	S3	S4/S5		Power
VSUS_ON	H	H	Adapter	H	SB
			Battery	L	
SUSB_ON	H	L	L		Main
SUSC_ON	H	H	L		DUAL

http://hobi-elektronika.net

0.1 A Beta

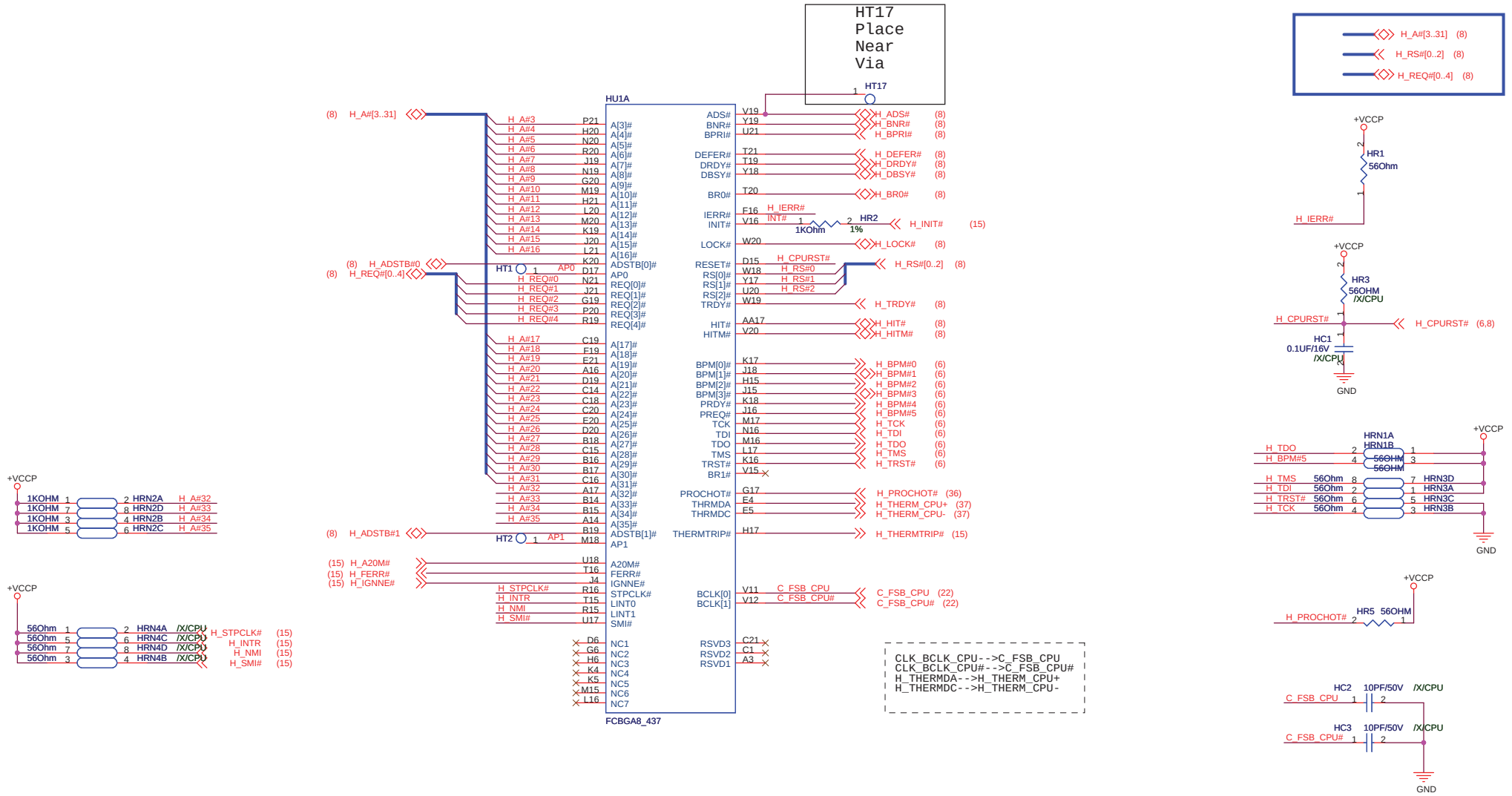

http://hobi-elektronika.net

ASUS	Title : Diamondville-1	
ASUSTek Computer Inc.	Engineer: Henry_Yang	
Size A3	Project Name P703	Rev 1.2G
Date: Tuesday, December 09, 2008	Sheet 4 of 51	

0.1 A Beta

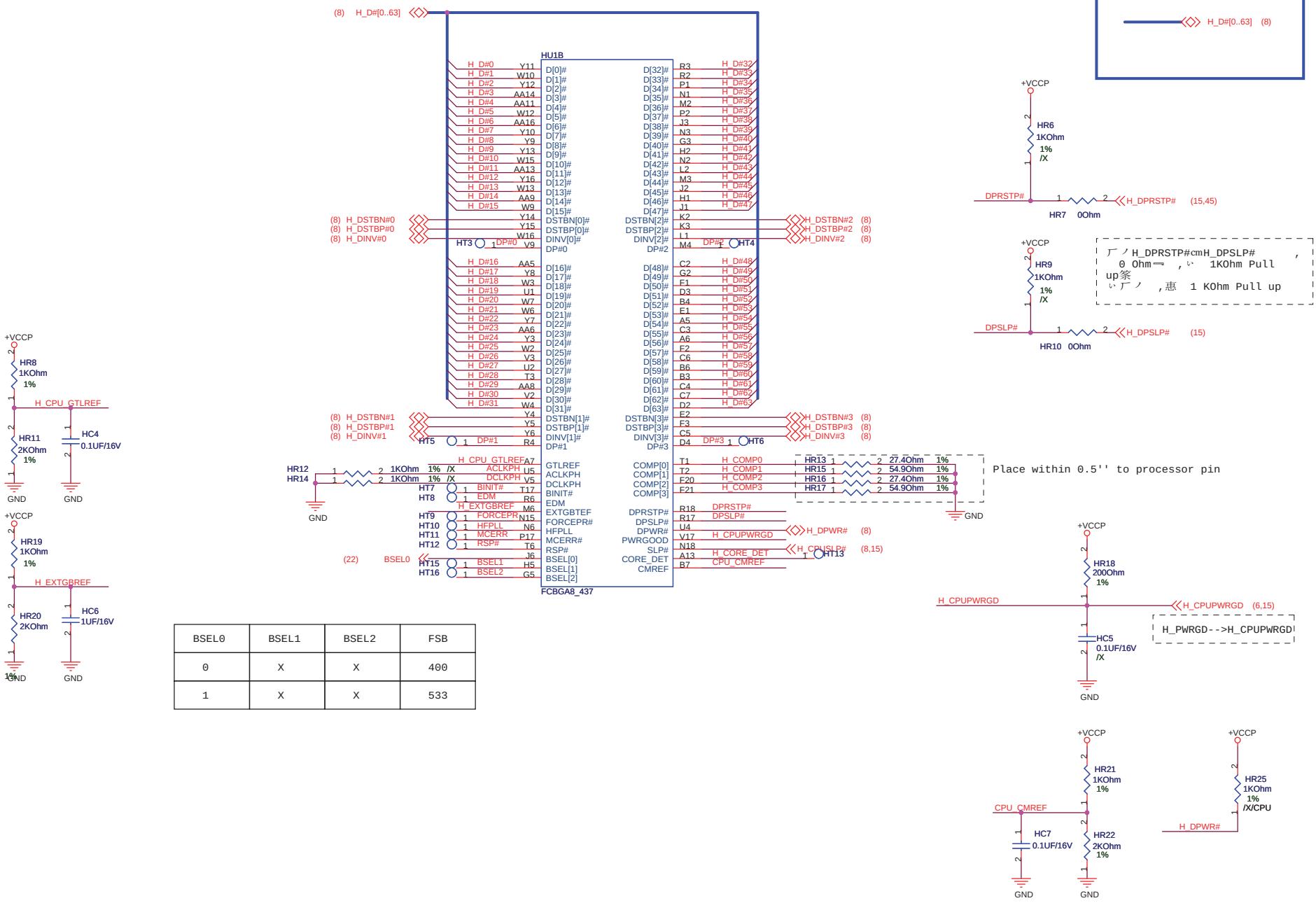

BSEL0	BSEL1	BSEL2	FSB
0	X	X	400
1	X	X	533

http://hobi-elektronika.net

ASUSTek Computer Inc.

Title : Diamondville-2

Engineer: Henry_Yang

Size	Project Name	Rev
A3	P703	1.2G

Date: Tuesday, December 09, 2008 Sheet 5 of 51

0.1 A Beta

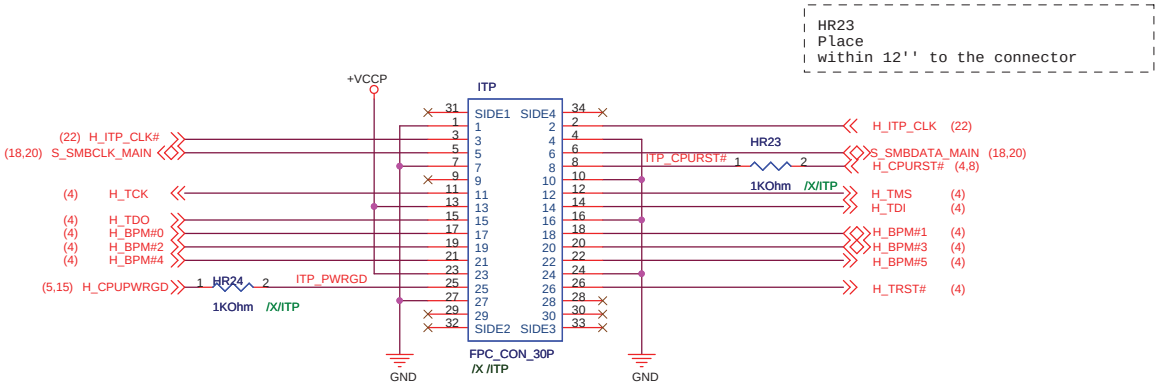

http://hobi-elektronika.net

ASUSTek Computer Inc.	Title : ITP		
	Engineer: Henry_Yang		
Size A3	Project Name P703		Rev 1.2G
Date: Tuesday, December 09, 2008	Sheet 6 of 51		

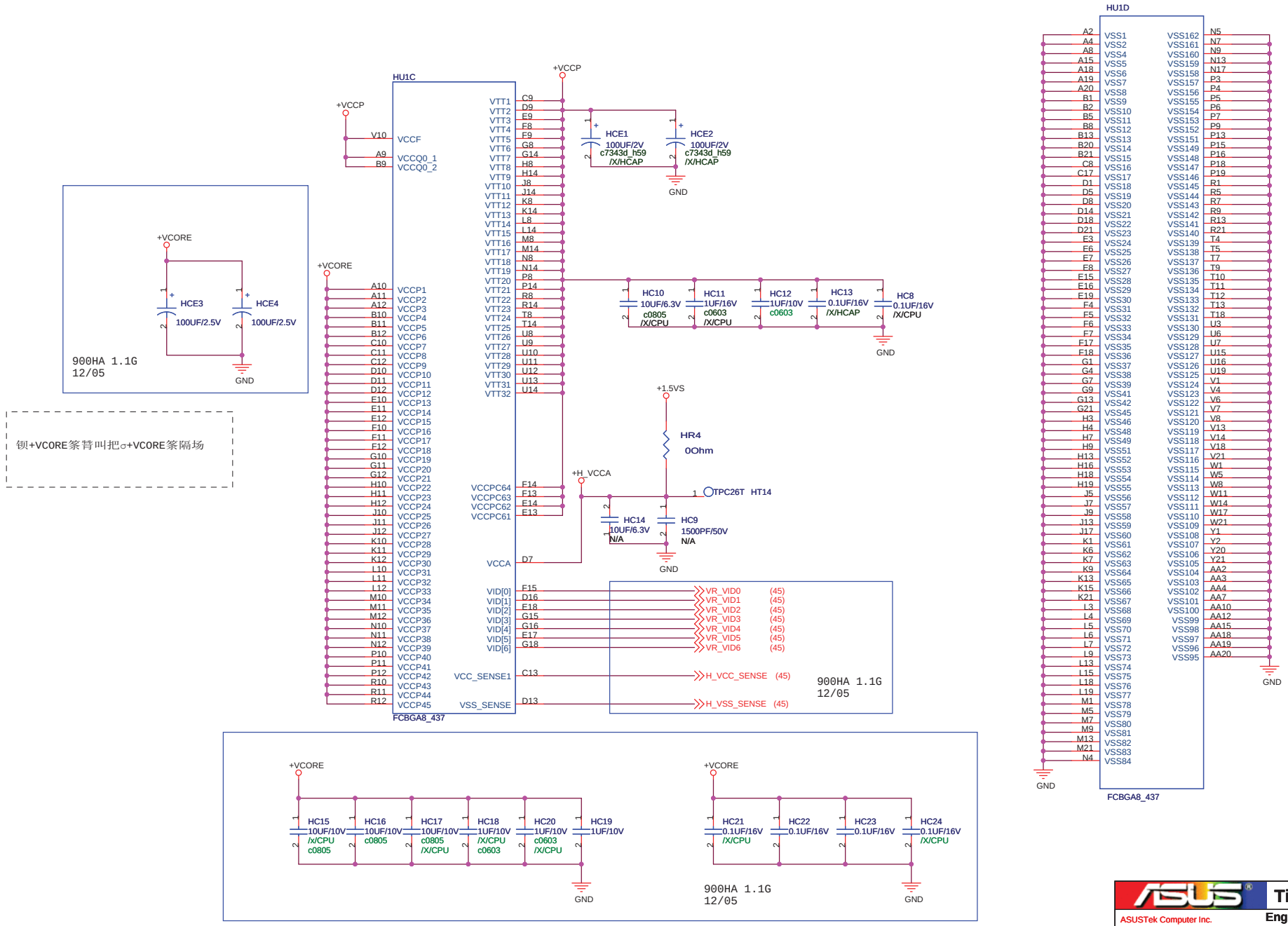

ASUSTek Computer Inc.	Title : Diamondville-PWR	
	Engineer: Henry_Yang	
Size A3	Project Name P703	Rev 1.2G
Date: Tuesday, December 09, 2008	Sheet 7 of 51	

http://hobi-elektronika.net

0.1BBeta

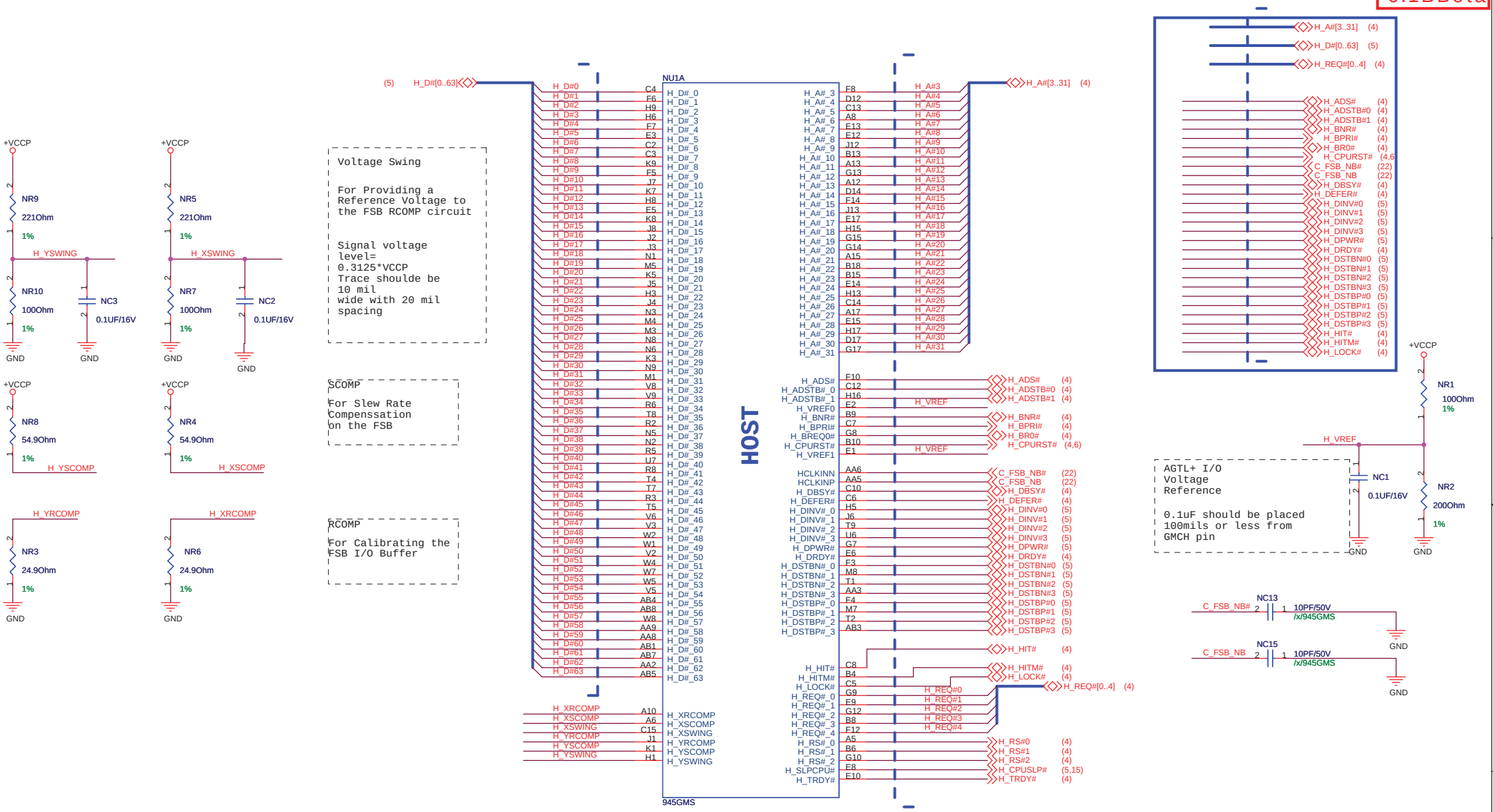

http://hobi-elektronika.net

<Variant Name>

ASUSTeK COMPUTER INC.

Title : 945GMS(HOST)

Engineer: Henry_Yang

Size	Project Name	Rev
A3	P703	1.2G

Date: Tuesday, December 09, 2008 Sheet 8 of 51

0.1BBeta

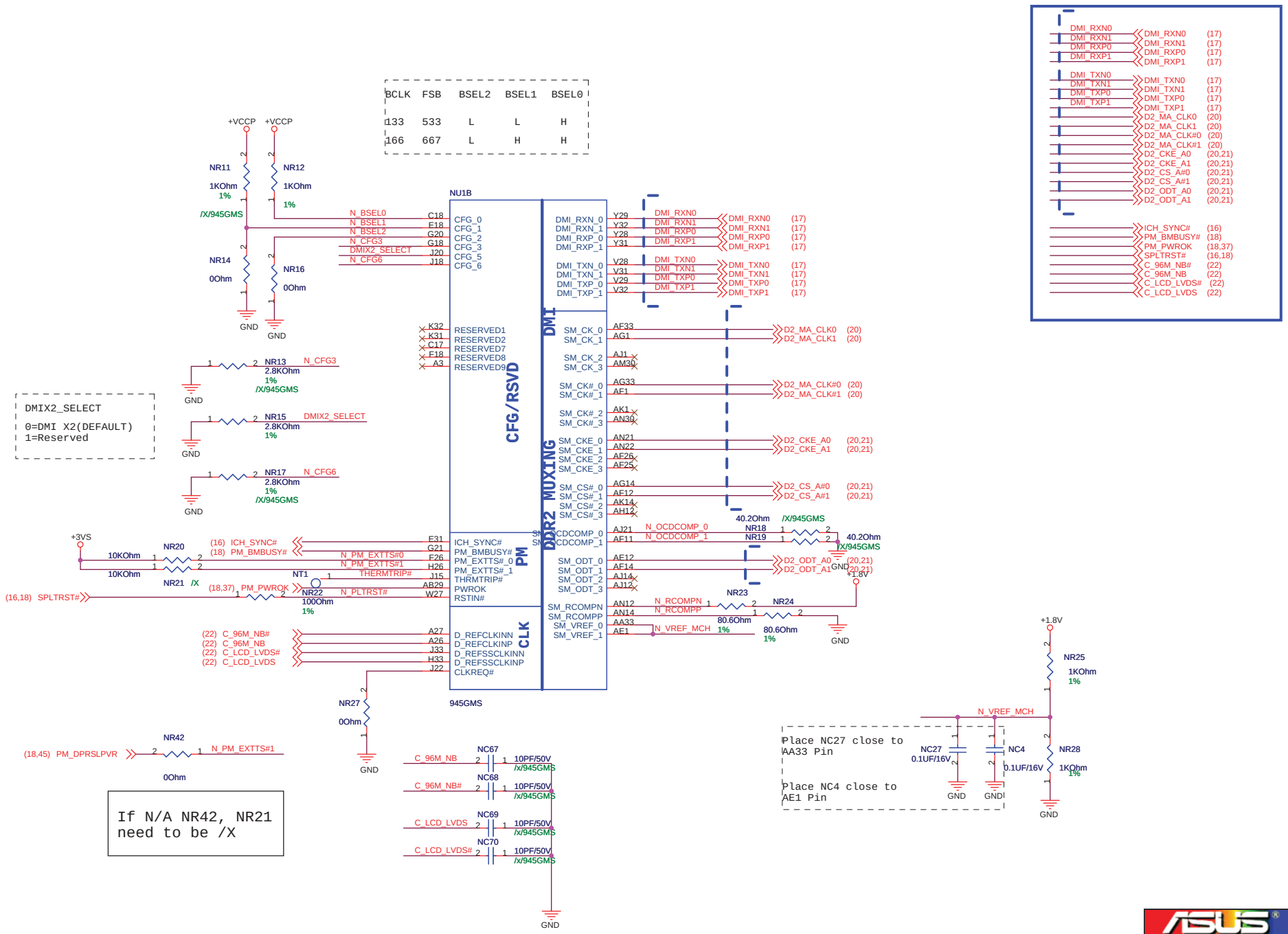

http://hobi-elektronika.net

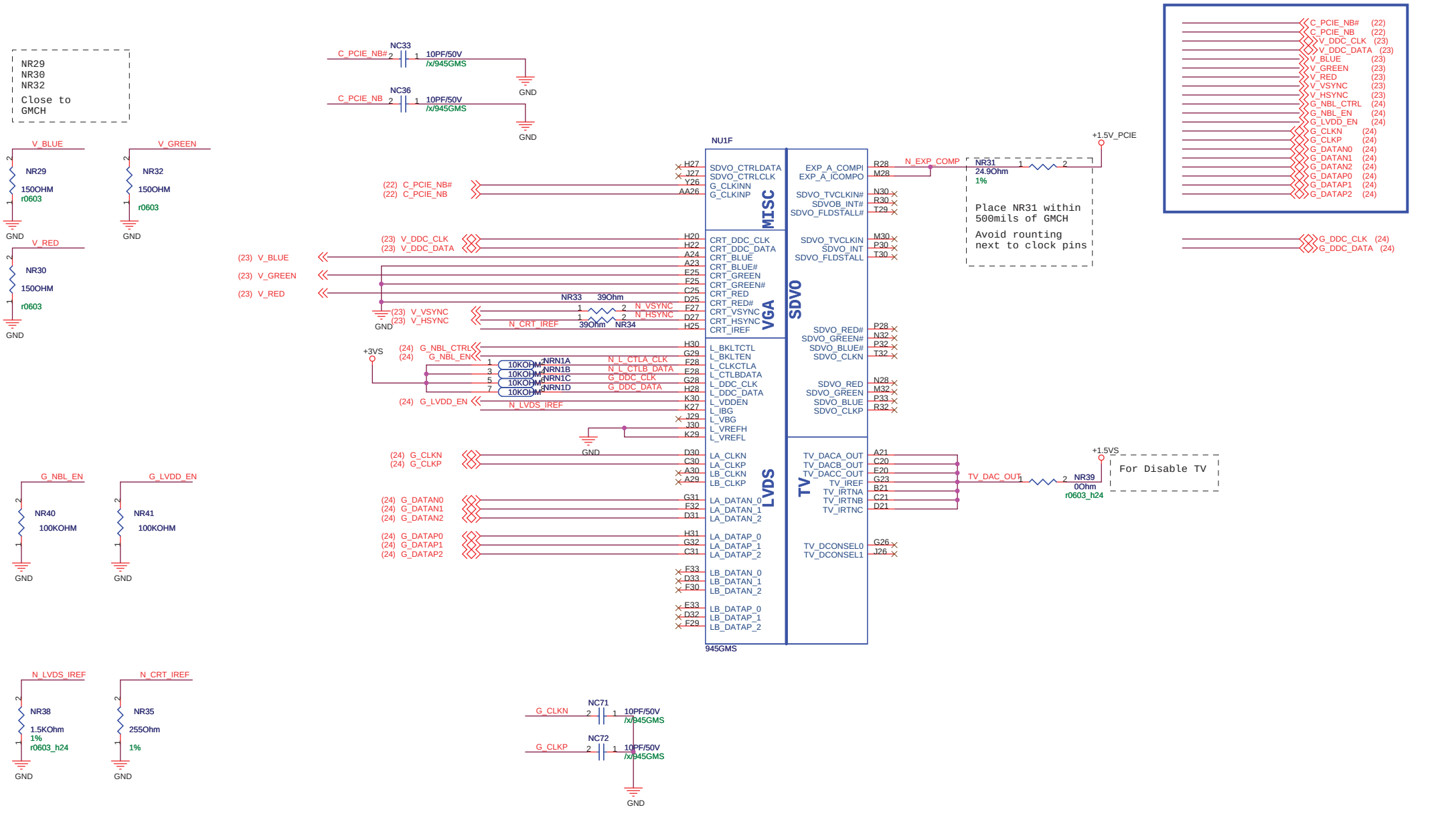

ASUS	Title : 945GSE(GRAPHIC)		
ASUSTek Computer Inc.	Engineer: Henry_Yang		
Size A3	Project Name P703		Rev 1.2G
Date: Tuesday, December 09, 2008	Sheet 10 of 51		

http://hobi-elektronika.net

0.1BBeta

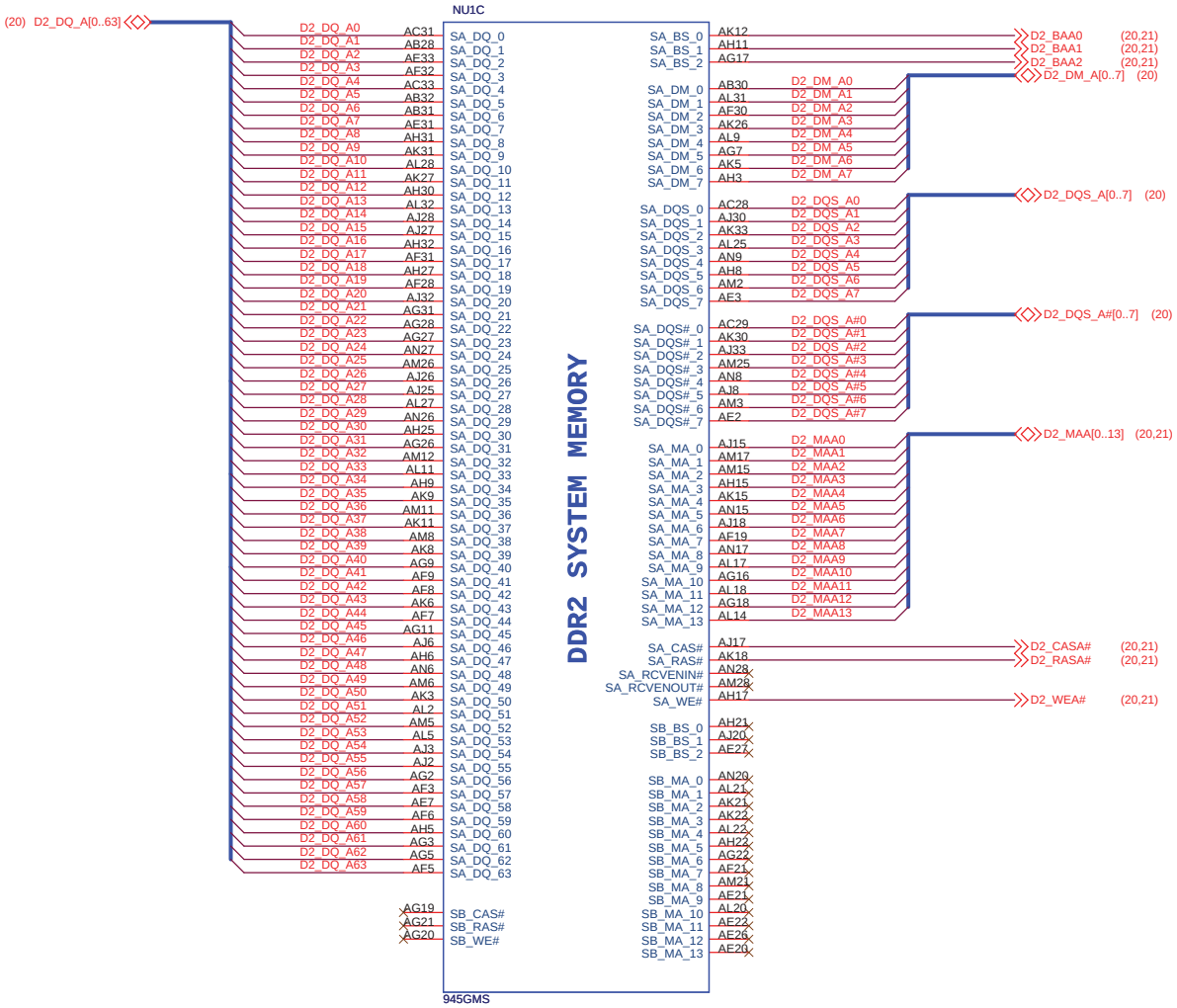

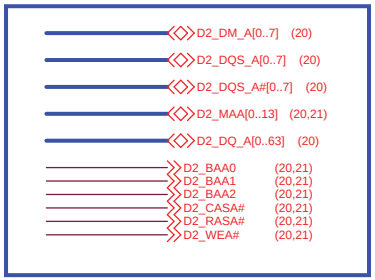

http://hobi-elektronika.net

ASUS	Title : 945GSE(DDR)		
ASUSTek Computer Inc.	Engineer: Henry_Yang		
Size A3	Project Name P703		Rev 1.2G
Date: Tuesday, December 09, 2008	Sheet 11 of 51		

0.1BBeta

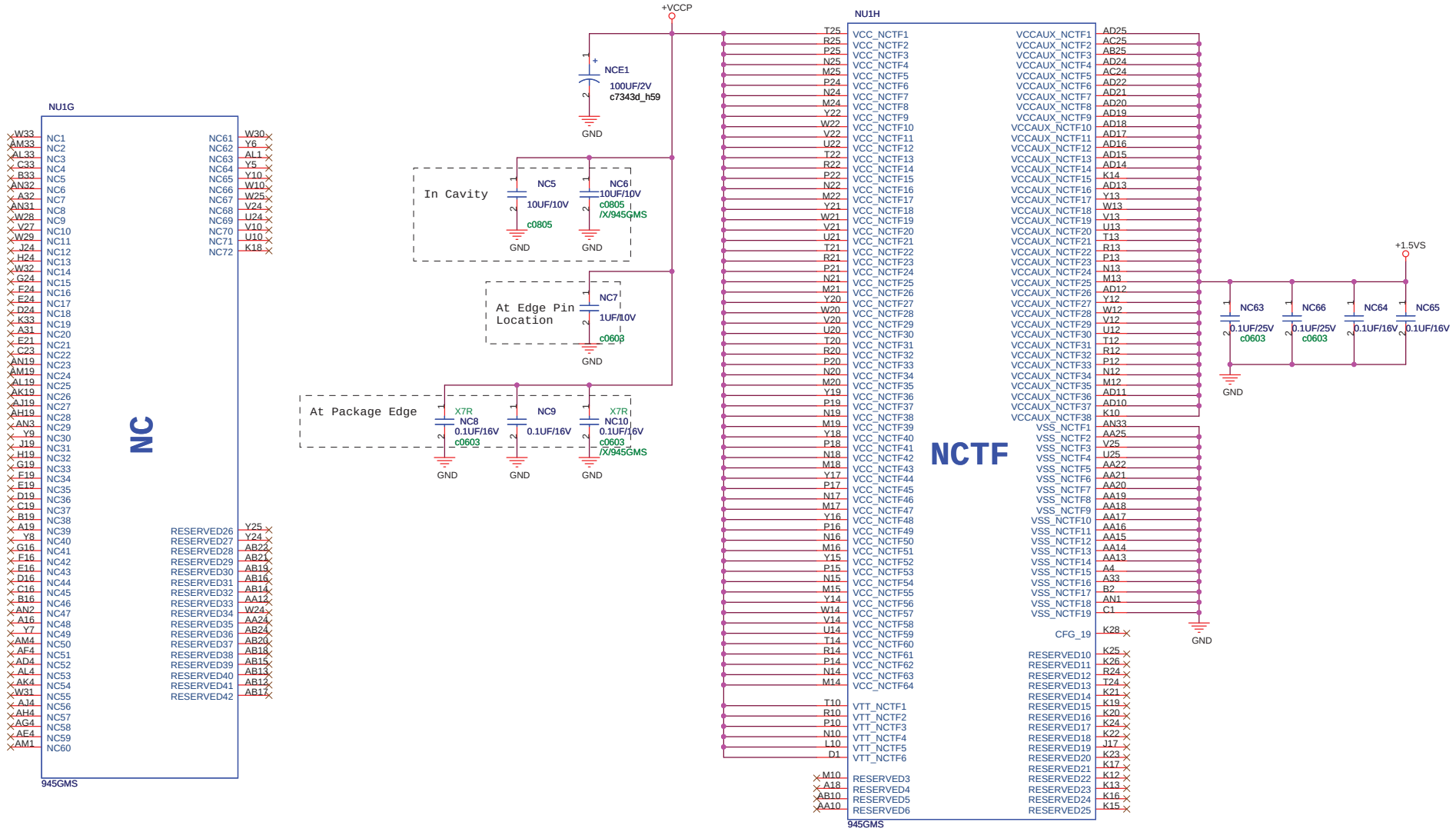

ASUSTek Computer Inc.	Title : 945GSE(NC,PWR)		
	Engineer: Henry_Yang		
Size A3	Project Name P703		Rev 1.2G
Date: Tuesday, December 09, 2008	Sheet 12 of 51		

http://hobi-elektronika.net

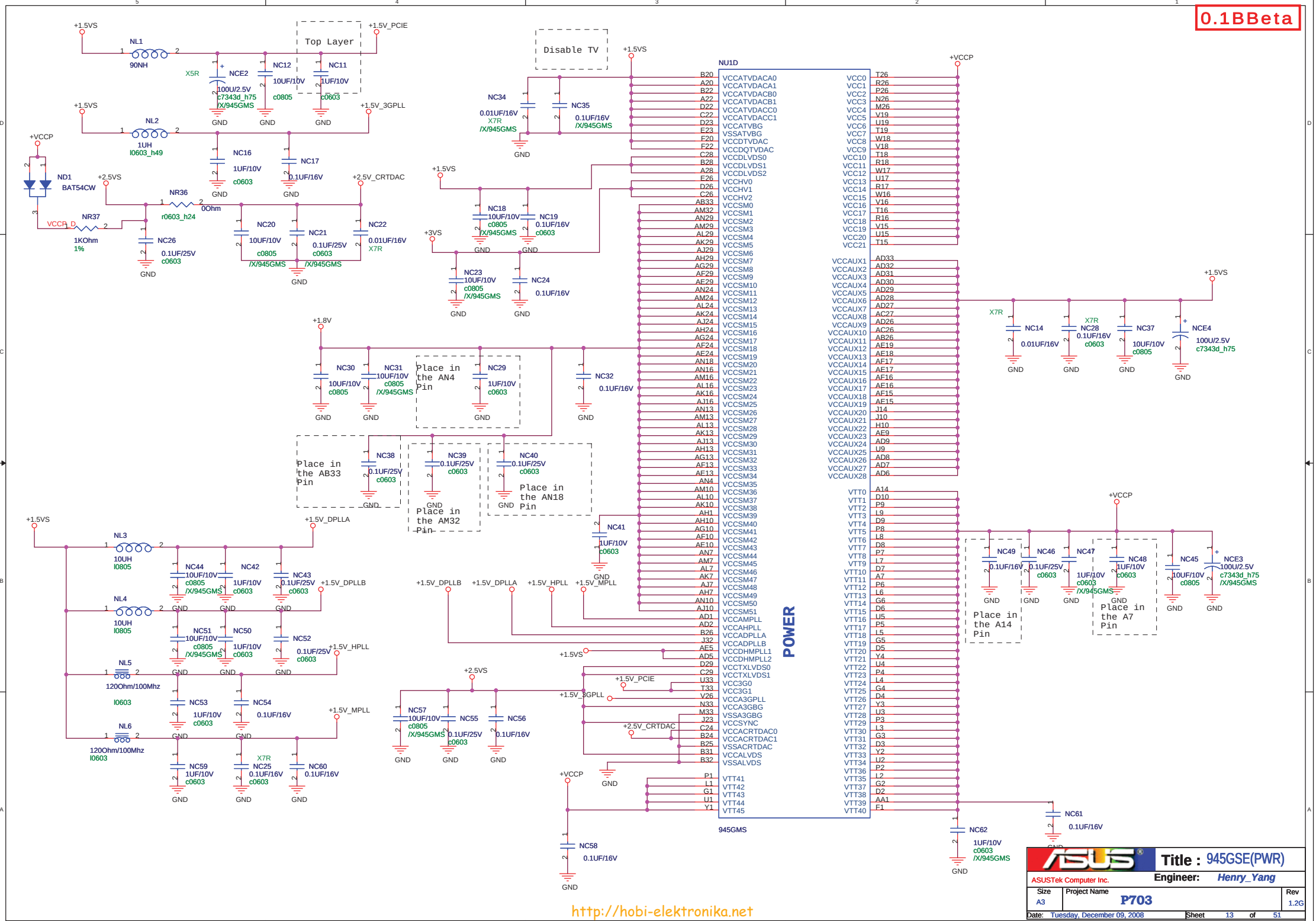
0.1BBeta
Top Layer
Disable TV
NU1D
POWER
945GSMS
Place in the AN4 Pin
Place in the AB33 Pin
Place in the AM32 Pin
Place in the AN18 Pin
Place in the A14 Pin
Place in the A7 Pin
Title : 945GSE(PWR)
ASUSTek Computer Inc.
Engineer: Henry_Yang
Size A3
Project Name P703
Rev 1.2G
Date: Tuesday, December 09, 2008
Sheet 13 of 51
http://hobi-elektronika.net

0.1BBeta

NU1E

VSS

Pin	Signal
AH33	VSS_1
Y33	VSS_2
V33	VSS_3
R33	VSS_4
G33	VSS_5
AK32	VSS_6
AG32	VSS_7
AE32	VSS_8
AC32	VSS_9
AA32	VSS_10
U32	VSS_11
H32	VSS_12
E32	VSS_13
C32	VSS_14
AM31	VSS_15
AJ31	VSS_16
AA31	VSS_17
U31	VSS_18
T31	VSS_19
R31	VSS_20
P31	VSS_21
N31	VSS_22
M31	VSS_23
J31	VSS_24
F31	VSS_25
AL30	VSS_26
AG30	VSS_27
AE30	VSS_28
AC30	VSS_29
AA30	VSS_30
Y30	VSS_31
V30	VSS_32
U30	VSS_33
G30	VSS_34
E30	VSS_35
B30	VSS_36
AA29	VSS_37
U29	VSS_38
R29	VSS_39
P29	VSS_40
N29	VSS_41
M29	VSS_42
H29	VSS_43
E29	VSS_44
B29	VSS_45
AK28	VSS_46
AH28	VSS_47
AE28	VSS_48
AA28	VSS_49
U28	VSS_50
T28	VSS_51
J28	VSS_52
D28	VSS_53
AM27	VSS_54
AF27	VSS_55
AB27	VSS_56
AA27	VSS_57
Y27	VSS_58
U27	VSS_59
T27	VSS_60
R27	VSS_61
P27	VSS_62
N27	VSS_63
M27	VSS_64
G27	VSS_65
F27	VSS_66
C27	VSS_67
B27	VSS_68
AL26	VSS_69
AH26	VSS_70
W26	VSS_71
U26	VSS_72
AN25	VSS_73
AK25	VSS_74
AG25	VSS_75
AE25	VSS_76
J25	VSS_77
G25	VSS_78
A25	VSS_79
H23	VSS_80
F23	VSS_81
B23	VSS_82
AM22	VSS_83
AJ22	VSS_84
AF22	VSS_85
G22	VSS_86
E22	VSS_87
J21	VSS_88
H21	VSS_89
F21	VSS_90
AM20	VSS_91
AK20	VSS_92
AH20	VSS_93
AF20	VSS_94
D20	VSS_95
W19	VSS_96
R19	VSS_97
AM18	VSS_98
AH18	VSS_99
AF18	VSS_100
U18	VSS_101
H18	VSS_102
D18	VSS_103
AK17	VSS_104
V17	VSS_105
T17	VSS_106
F17	VSS_107
B17	VSS_108
AH16	VSS_109
U16	VSS_110
	VSS_111
	VSS_112
	VSS_113
	VSS_114
	VSS_115
	VSS_116
	VSS_117
	VSS_118
	VSS_119
	VSS_120
	VSS_121
	VSS_122
	VSS_123
	VSS_124
	VSS_125
	VSS_126
	VSS_127
	VSS_128
	VSS_129
	VSS_130
	VSS_131
	VSS_132
	VSS_133
	VSS_134
	VSS_135
	VSS_136
	VSS_137
	VSS_138
	VSS_139
	VSS_140
	VSS_141
	VSS_142
	VSS_143
	VSS_144
	VSS_145
	VSS_146
	VSS_147
	VSS_148
	VSS_149
	VSS_150
	VSS_151
	VSS_152
	VSS_153
	VSS_154
	VSS_155
	VSS_156
	VSS_157
	VSS_158
	VSS_159
	VSS_160
	VSS_161
	VSS_162
	VSS_163
	VSS_164
	VSS_165
	VSS_166
	VSS_167
	VSS_168
	VSS_169
	VSS_170
	VSS_171
	VSS_172
	VSS_173
	VSS_174
	VSS_175
	VSS_176
	VSS_177
	VSS_178
	VSS_179
	VSS_180
	VSS_181
	VSS_182
	VSS_183
	VSS_184
	VSS_185
	J16
	AL15
	AG15
	W15
	R15
	F15
	D15
	AM14
	AH14
	AE14
	H14
	B14
	F13
	D13
	AL12
	AG12
	H12
	B12
	AN11
	AJ11
	AE11
	AM9
	AJ9
	AB9
	W9
	R9
	M9
	J9
	F9
	C9
	A9
	AL8
	AG8
	AE8
	U8
	AA7
	V7
	R7
	N7
	H7
	F7
	B7
	AL6
	AG6
	AE6
	AB6
	W6
	T6
	M6
	K6
	AN5
	AJ5
	B5
	AA4
	V4
	R4
	N4
	K4
	H4
	E4
	AL3
	AD3
	W3
	T3
	B3
	AK2
	AH2
	AF2
	AB2
	M2
	K2
	H2
	F2
	V1
	R1

GND

945GMS

http://hobi-elektronika.net

ASUS	Title : 945GSE(GND)	
ASUSTek Computer Inc.	Engineer: Henry_Yang	
Size A3	Project Name P703	Rev 1.2G
Date: Tuesday, December 09, 2008	Sheet 14 of 51	

0.1BBeta

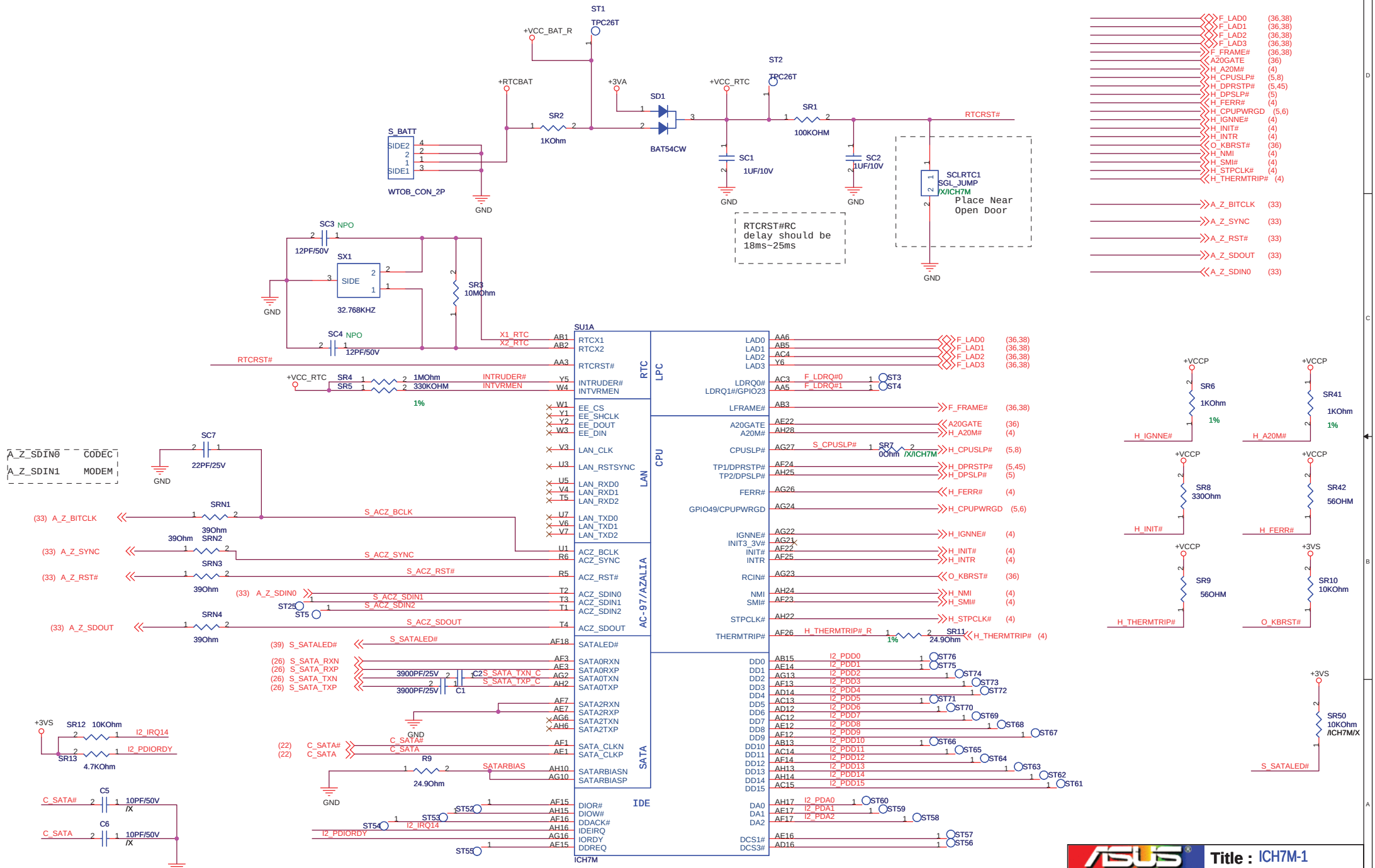

http://hobi-elektronika.net

ASUSTek Computer Inc.	Title : ICH7M-1	Engineer: Henry_Yang
Size A3	Project Name P703	Rev 1.2G
Date: Tuesday, December 09, 2008	Sheet 15 of 51	

0.1BBeta

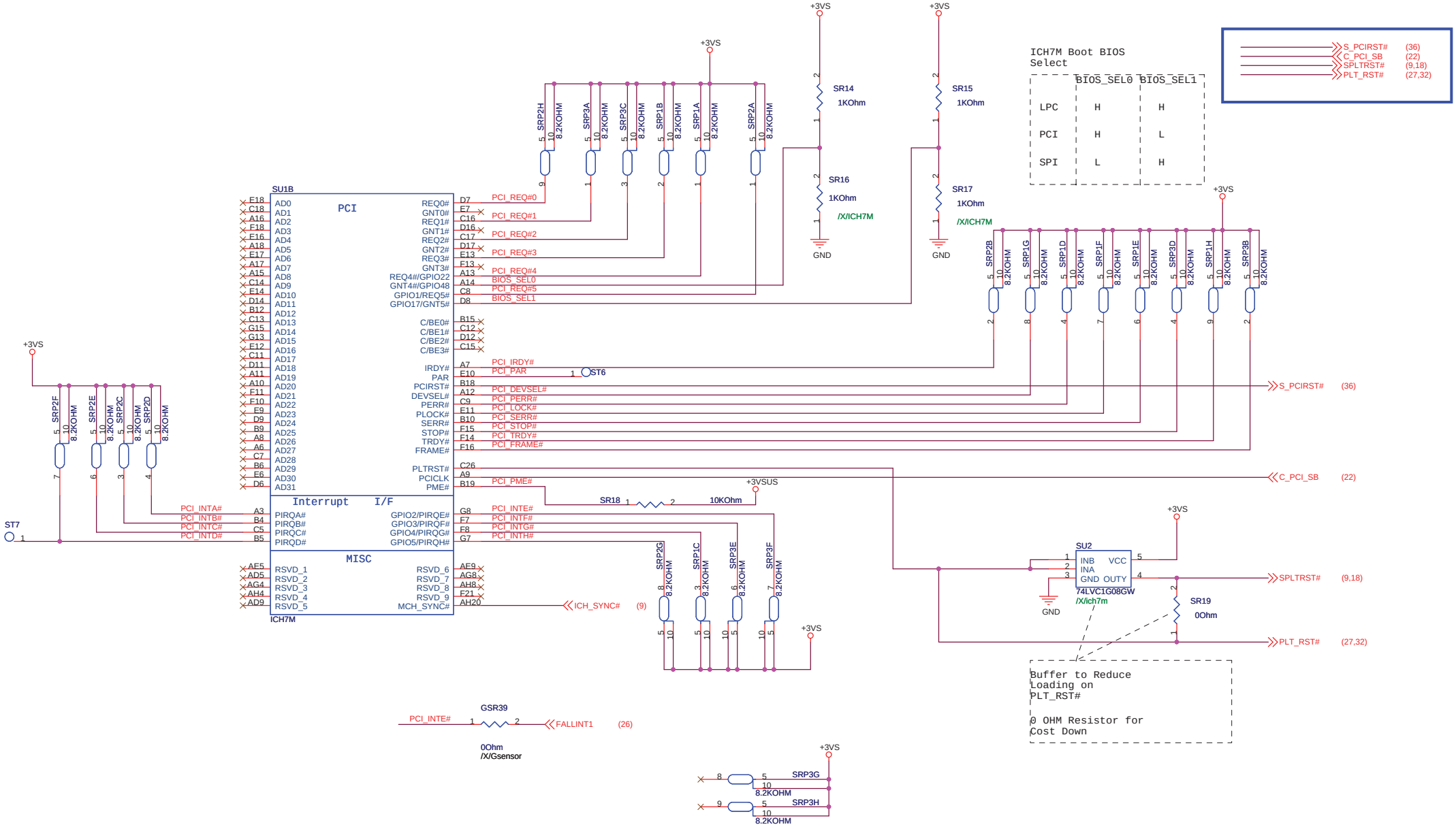

http://hobi-elektronika.net

ASUSTek Computer Inc.	Title : ICH7M-2	Engineer: Henry_Yang
Size A3	Project Name P703	Rev 1.2G
Date: Tuesday, December 09, 2008	Sheet 16 of 51	

0.1BBeta

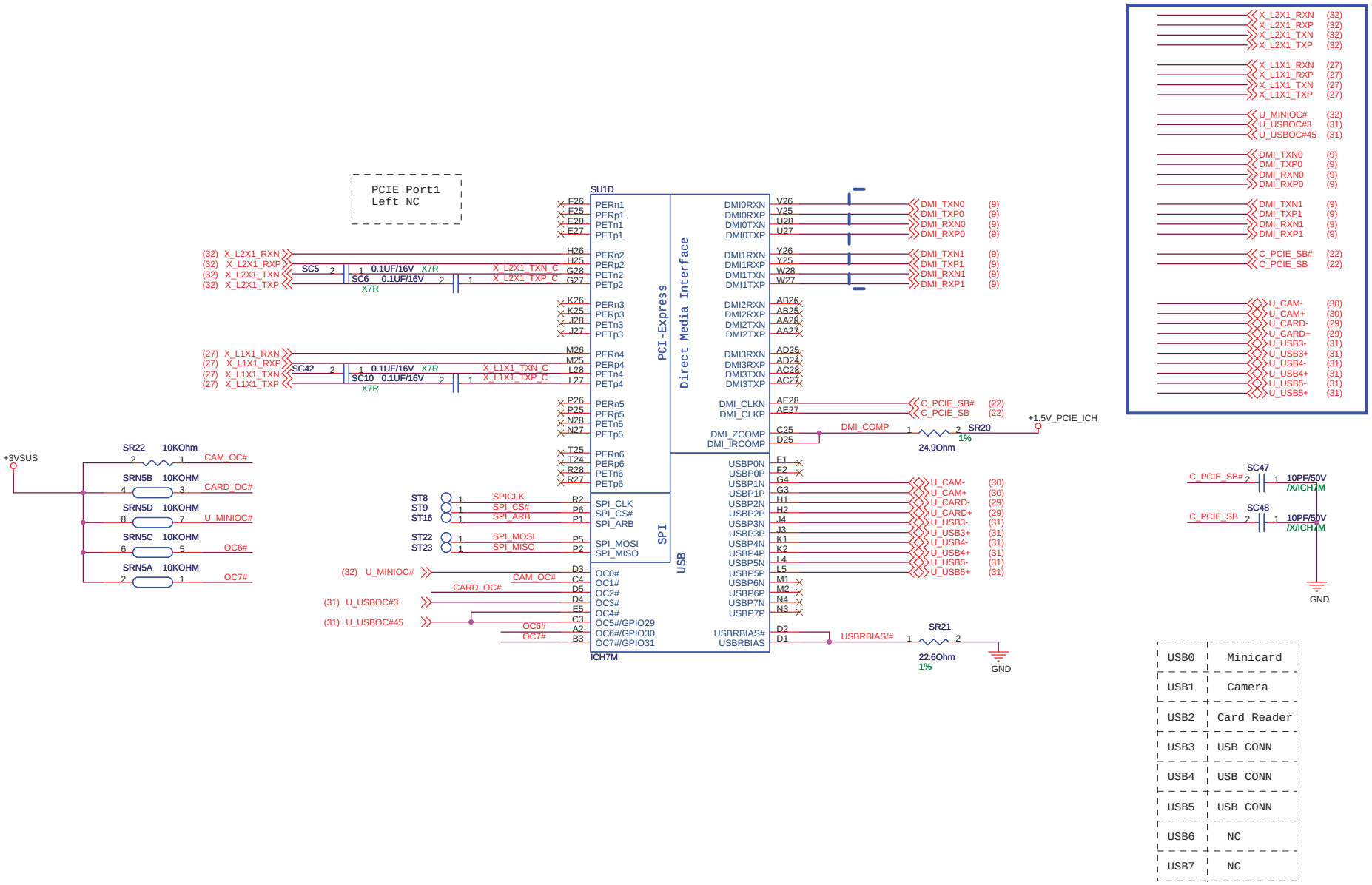

USB0	Minicard
USB1	Camera
USB2	Card Reader
USB3	USB CONN
USB4	USB CONN
USB5	USB CONN
USB6	NC
USB7	NC

ASUSTek Computer Inc.

Title : ICH7M-3

Engineer: Henry_Yang

Size	Project Name	Rev
A3	P703	1.2G

Date: Tuesday, December 09, 2008 Sheet 17 of 51

http://hobi-elektronika.net

0.1BBeta

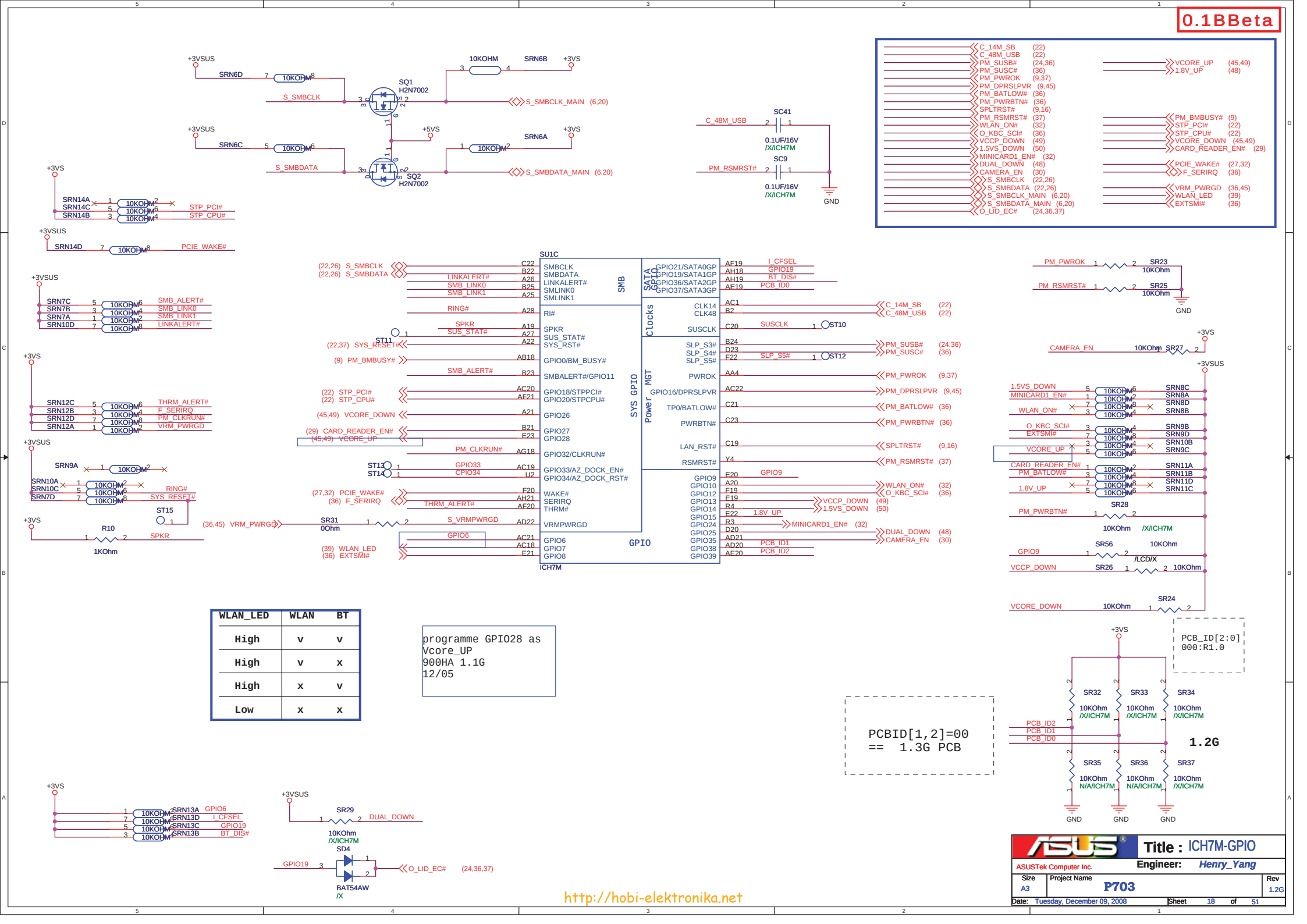

WLAN_LED	WLAN	BT
High	v	v
High	v	x
High	x	v
Low	x	x

ASUSTek Computer Inc.

Title : ICH7M-GPIO

Engineer: Henry_Yang

Size	Project Name	Rev
A3	P703	1.2G

Date: Tuesday, December 09, 2008 Sheet 18 of 51

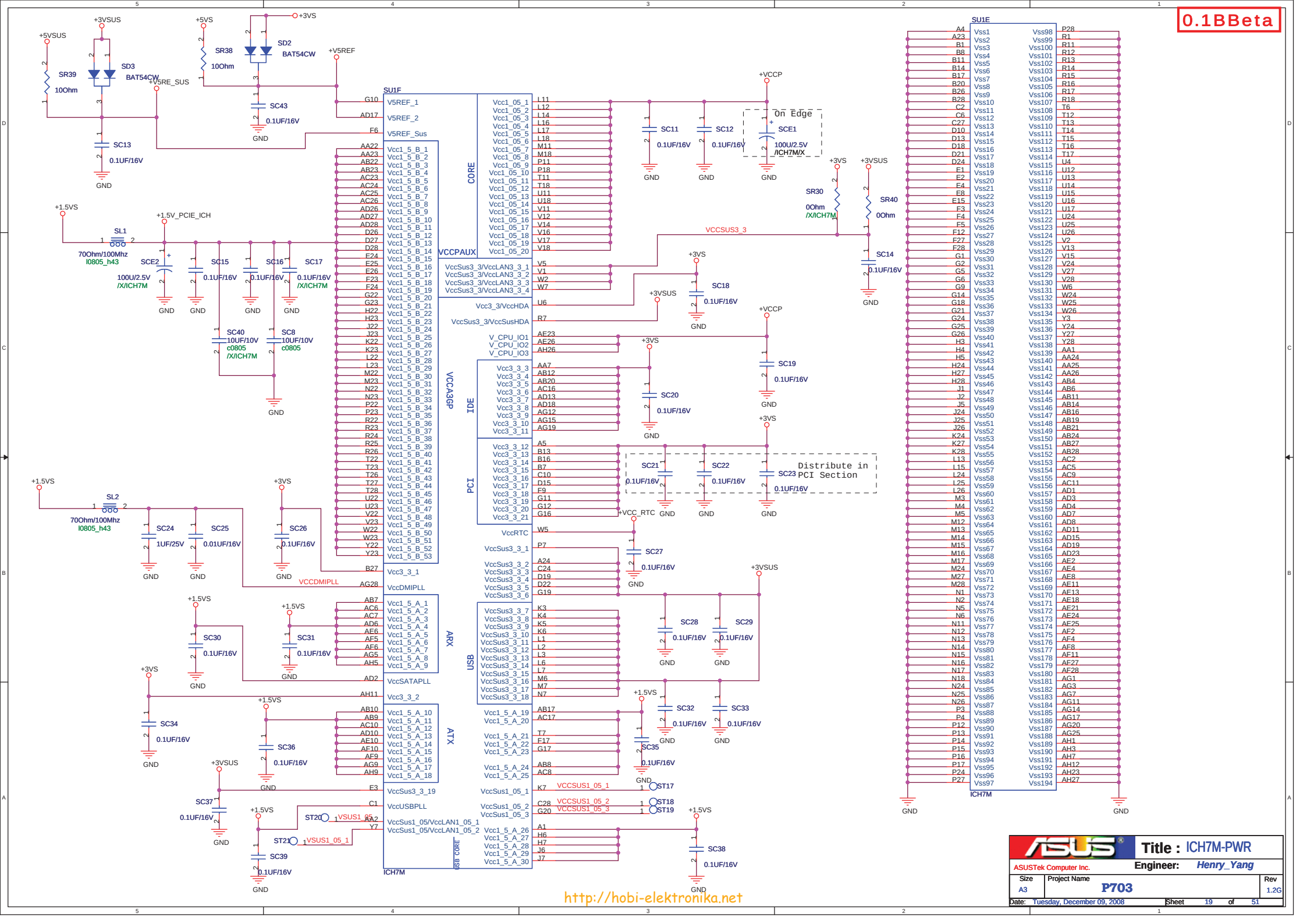
0.1BBeta
SU1F
ICH7M
SU1E
ICH7M
CORE
VCCPAUX
VCCA3GP
IDE
PCI
ARX
USB
ATX
USB CORE
On Edge
Distribute in PCI Section
+5VSUS
+3VSUS
+5VS
+3VS
+5VREF
+5RE_SUS
+1.5VS
+1.5V_PCIE_ICH
+VCCP
+VCC_RTC
VCCSUS3_3
VCCDMIPLL
VSUS1_05_1
GND
http://hobi-elektronika.net
ASUSTek Computer Inc.
Title : ICH7M-PWR
Engineer: Henry_Yang
Size A3
Project Name P703
Rev 1.2G
Date: Tuesday, December 09, 2008
Sheet 19 of 51

0.1BBeta

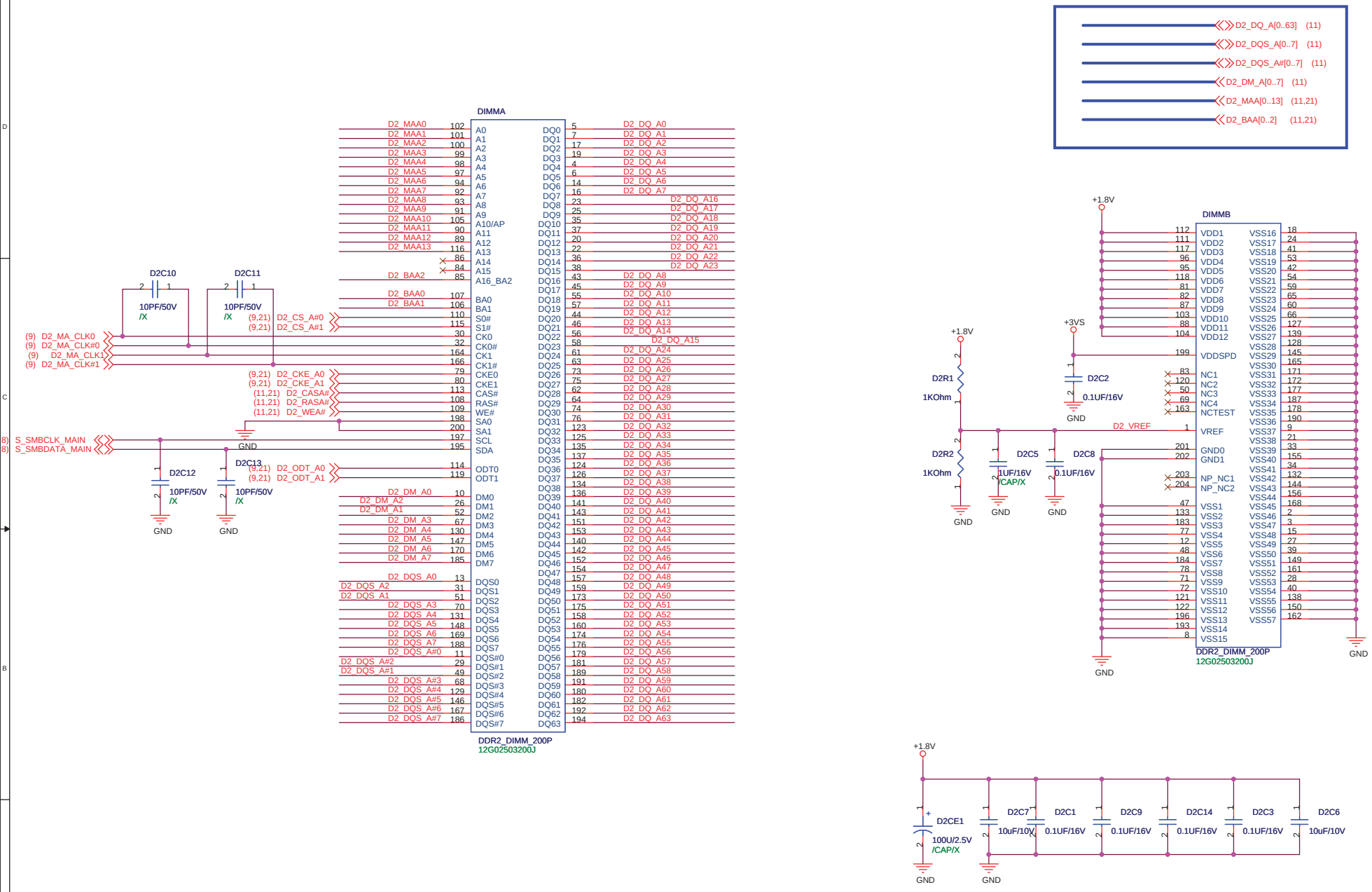

http://hobi-elektronika.net

0.1BBeta

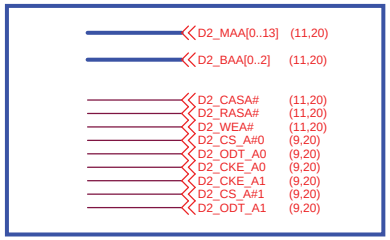

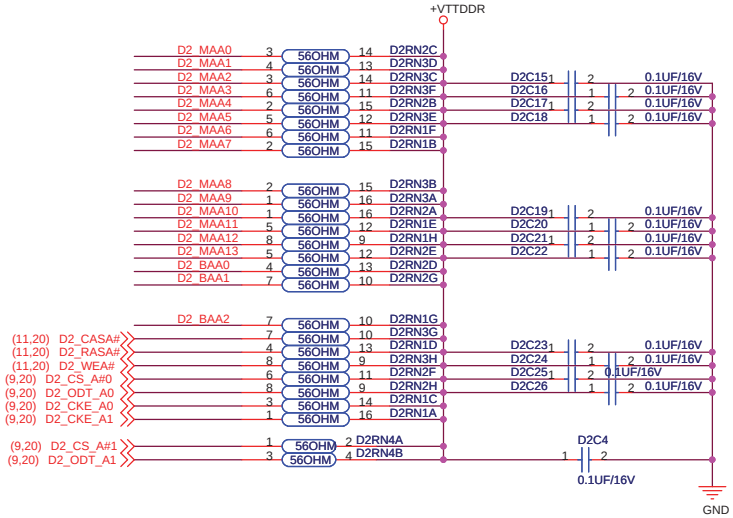

ASUS	Title : DDR-Termination		
ASUSTek Computer Inc.	Engineer: Henry_Yang		
Size A3	Project Name P703		Rev 1.2G
Date: Tuesday, December 09, 2008	Sheet 21 of 51		

http://hobi-elektronika.net

0.1A Beta

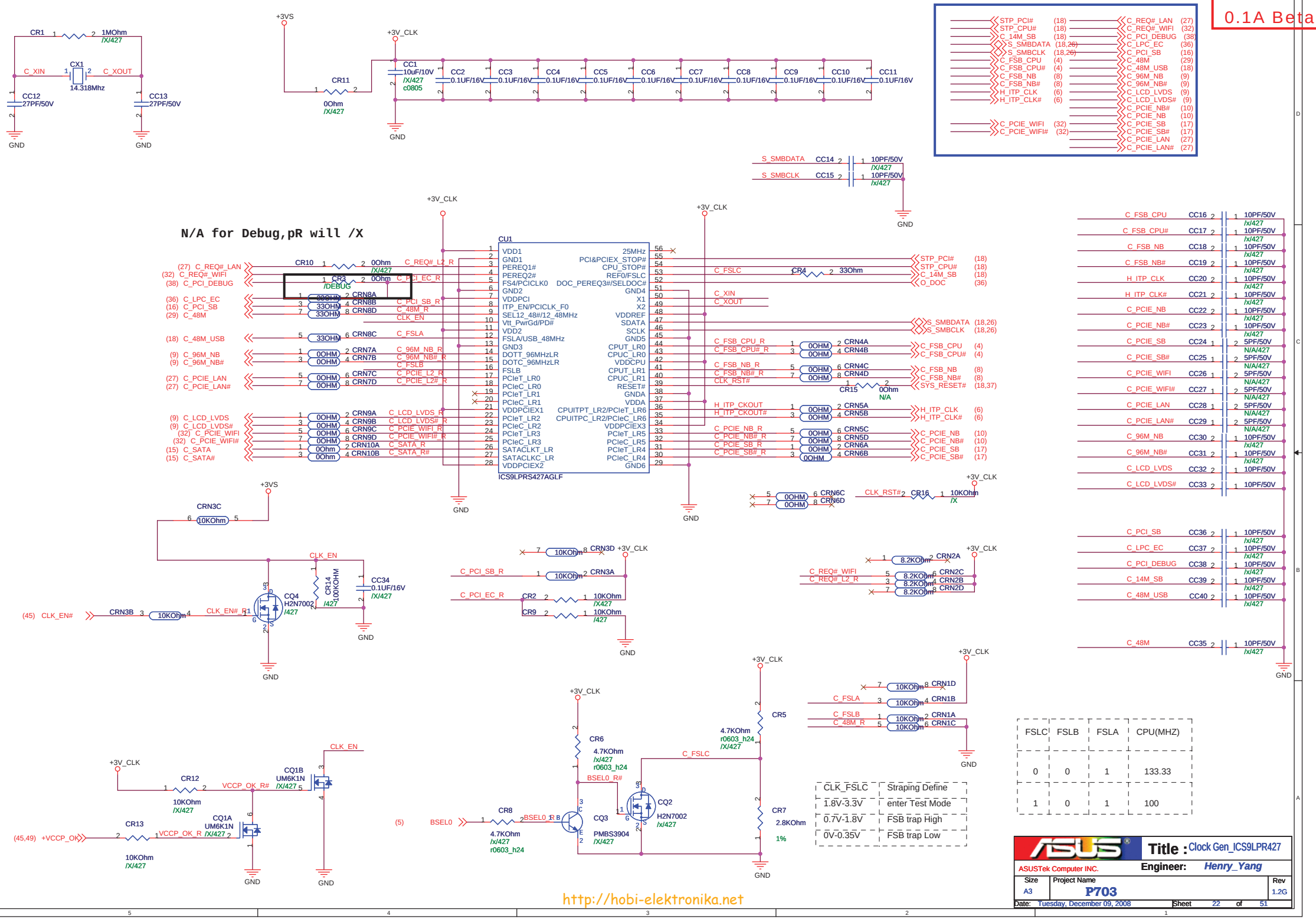
N/A for Debug,pR will /X
CU1
ICS9LPRS427AGLF
CR1 1MOhm /X/427
CX1 14.318Mhz
C_XIN
C_XOUT
CC12 27PF/50V
CC13 27PF/50V
GND
+3VS
+3V_CLK
CR11 0Ohm /X/427
CC1 10uF/10V /X/427 c0805
CC2 0.1UF/16V
CC3 0.1UF/16V
CC4 0.1UF/16V
CC5 0.1UF/16V
CC6 0.1UF/16V
CC7 0.1UF/16V
CC8 0.1UF/16V
CC9 0.1UF/16V
CC10 0.1UF/16V
CC11 0.1UF/16V
S_SMBDATA CC14 10PF/50V /X/427
S_SMBCLK CC15 10PF/50V /X/427
CR10 0Ohm /X/427
CR3 0Ohm /DEBUG
CR4 33Ohm
CR15 0Ohm N/A
CR16 10KOhm /X
CRN3C 10KOhm
CRN3B 10KOhm
CRN3D 10KOhm
CRN3A 10KOhm
CRN2A 8.2KOhm
CRN2C 8.2KOhm
CRN2B 8.2KOhm
CRN2D 8.2KOhm
CRN1D 10KOhm
CRN1B 10KOhm
CRN1A 10KOhm
CRN1C 10KOhm
CRN6C 0OHM
CRN6D 0OHM
CRN8A 33OHM
CRN8B 33OHM
CRN8D 33OHM
CRN8C 33OHM
CRN7A 0OHM
CRN7B 0OHM
CRN7C 0OHM
CRN7D 0OHM
CRN9A 0OHM
CRN9B 0OHM
CRN9C 0OHM
CRN9D 0OHM
CRN10A 0Ohm
CRN10B 0Ohm
CRN4A 0OHM
CRN4B 0OHM
CRN4C 0OHM
CRN4D 0OHM
CRN5A 0OHM
CRN5B 0OHM
CRN5C 0OHM
CRN5D 0OHM
CRN6A 0OHM
CRN6B 0OHM
CC16 10PF/50V /X/427
CC17 10PF/50V /X/427
CC18 10PF/50V /X/427
CC19 10PF/50V /X/427
CC20 10PF/50V /X/427
CC21 10PF/50V /X/427
CC22 10PF/50V /X/427
CC23 10PF/50V /X/427
CC24 5PF/50V N/A/427
CC25 5PF/50V N/A/427
CC26 5PF/50V N/A/427
CC27 5PF/50V N/A/427
CC28 5PF/50V N/A/427
CC29 5PF/50V N/A/427
CC30 10PF/50V /X/427
CC31 10PF/50V /X/427
CC32 10PF/50V
CC33 10PF/50V
CC36 10PF/50V /X/427
CC37 10PF/50V /X/427
CC38 10PF/50V /X/427
CC39 10PF/50V /X/427
CC40 10PF/50V /X/427
CC35 10PF/50V /X/427
CC34 0.1UF/16V /X/427
CR14 100KOHM /X/427
CQ4 H2N7002 /X/427
CR2 10KOhm /X/427
CR9 10KOhm /X/427
CR12 10KOhm /X/427
CR13 10KOhm /X/427
CQ1A UM6K1N /X/427
CQ1B UM6K1N /X/427
CR6 4.7KOhm /X/427 r0603_h24
CR8 4.7KOhm /X/427 r0603_h24
CQ3 PMBS3904 /X/427
CQ2 H2N7002 /X/427
CR5 4.7KOhm r0603_h24 /X/427
CR7 2.8KOhm 1%
CLK_EN
CLK_EN#
VCCP_OK_R#
VCCP_OK_R
+VCCP_OK
BSEL0
BSEL0_R#
C_FSLC
C_FSLA
C_FSLB
C_48M_R
C_PCI_SB_R
C_PCI_EC_R
C_REQ#_WIFI
C_REQ#_L2_R
C_REQ#_LAN
C_REQ#_WIFI
C_PCI_DEBUG
C_LPC_EC
C_PCI_SB
C_48M
C_48M_USB
C_96M_NB
C_96M_NB#
C_PCIE_LAN
C_PCIE_LAN#
C_LCD_LVDS
C_LCD_LVDS#
C_PCIE_WIFI
C_PCIE_WIFI#
C_SATA
C_SATA#
C_PCIE_L2_R
C_PCIE_L2#_R
C_FSB_CPU
C_FSB_CPU#
C_FSB_NB
C_FSB_NB#
H_ITP_CLK
H_ITP_CLK#
C_PCIE_NB
C_PCIE_NB#
C_PCIE_SB
C_PCIE_SB#
C_PCIE_LAN
C_PCIE_LAN#
C_96M_NB
C_96M_NB#
C_LCD_LVDS
C_LCD_LVDS#
C_48M
CLK_RST#
STP_PCI#
STP_CPU#
C_14M_SB
O_DOC
S_SMBDATA
S_SMBCLK
SYS_RESET#
H_ITP_CKOUT
H_ITP_CKOUT#
C_PCIE_WIFI
C_PCIE_WIFI#
C_PCI_DEBUG
C_LPC_EC
C_PCI_SB
C_PCIE_LAN
C_PCIE_LAN#
C_LCD_LVDS
C_LCD_LVDS#
C_PCIE_NB
C_PCIE_NB#
C_PCIE_SB
C_PCIE_SB#
C_PCIE_LAN
C_PCIE_LAN#
C_48M_USB
C_14M_SB
C_48M
FSLC FSLB FSLA CPU(MHZ)
0 0 1 133.33
1 0 1 100
CLK_FSLC Straping Define
1.8V-3.3V enter Test Mode
0.7V-1.8V FSB trap High
0V-0.35V FSB trap Low
Title : Clock Gen_ICS9LPR427
ASUSTek Computer INC.
Engineer: Henry_Yang
Size A3
Project Name P703
Rev 1.2G
Date: Tuesday, December 09, 2008
Sheet 22 of 51
http://hobi-elektronika.net

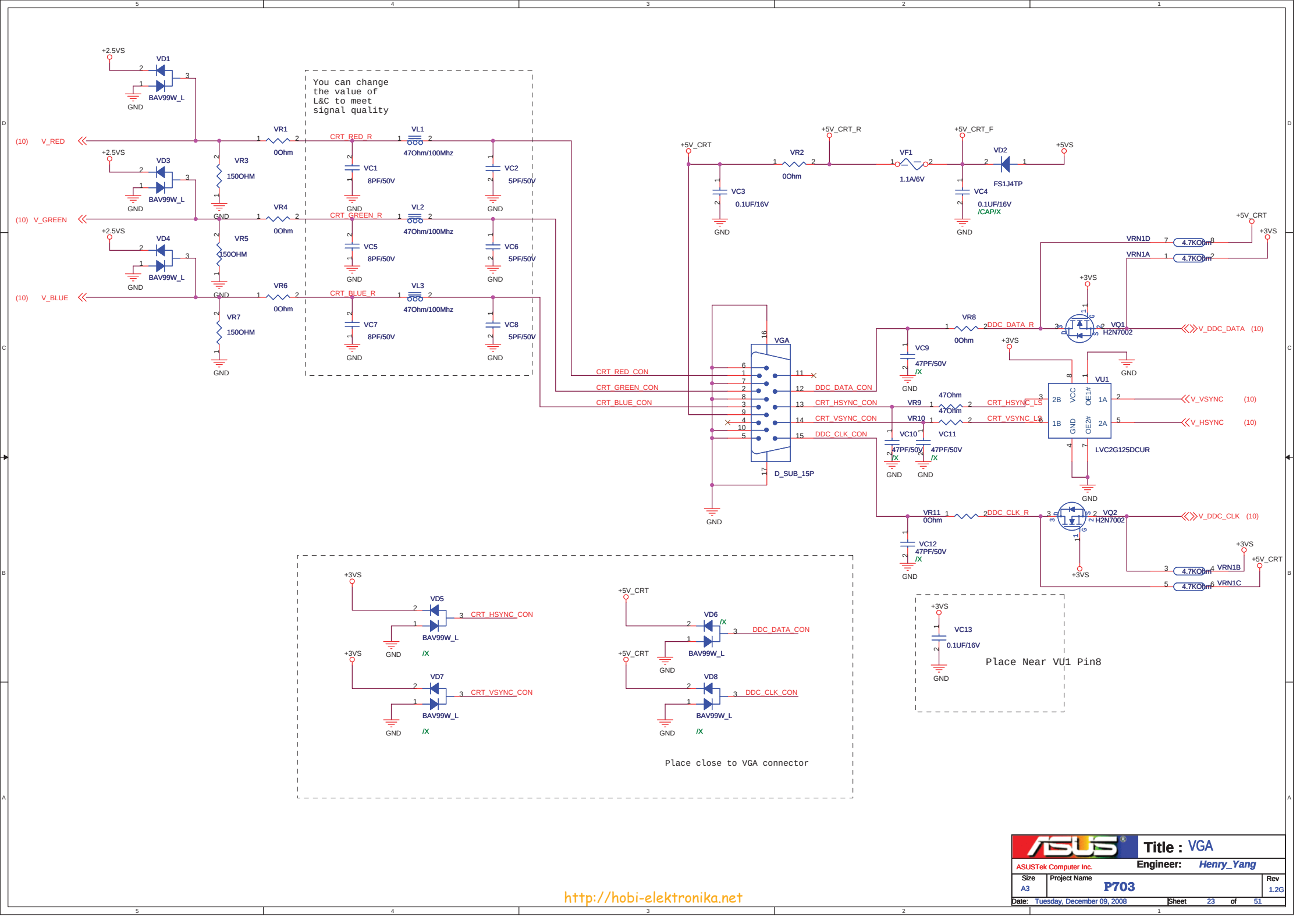

ASUSTek Computer Inc.	Title : VGA	Engineer: Henry_Yang
Size A3	Project Name P703	Rev 1.2G
Date: Tuesday, December 09, 2008	Sheet 23 of 51	

http://hobi-elektronika.net

0.1 B Beta

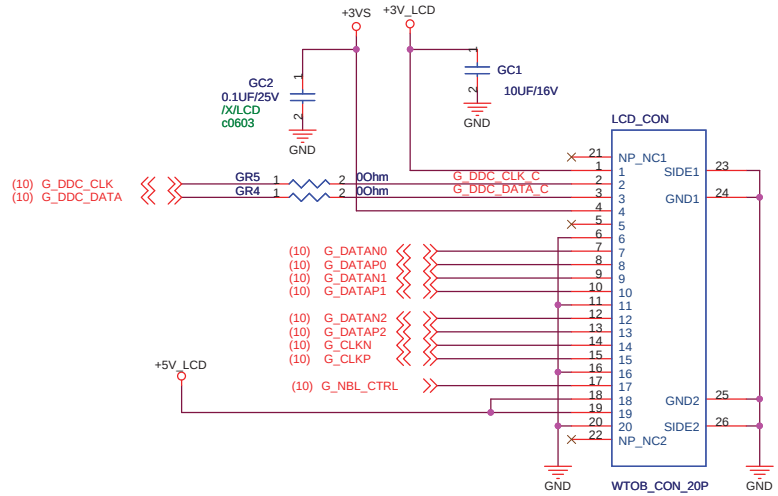

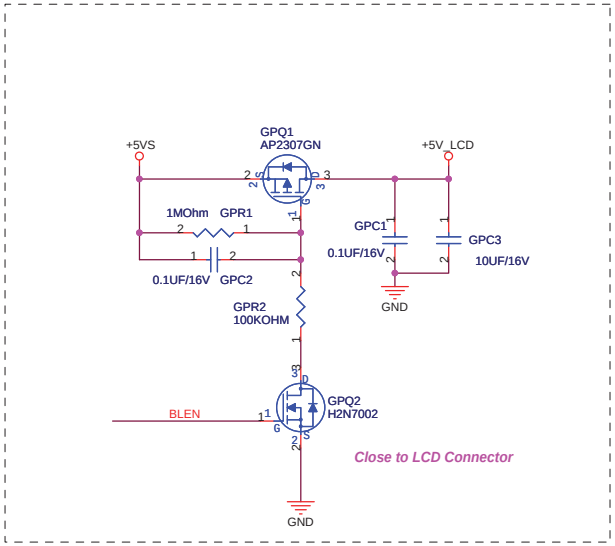

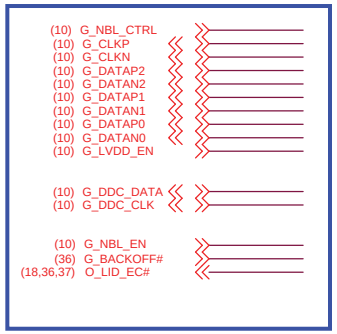

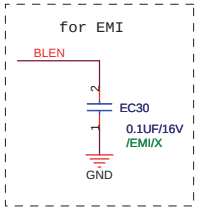

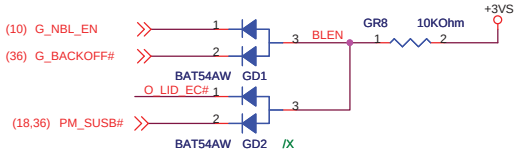

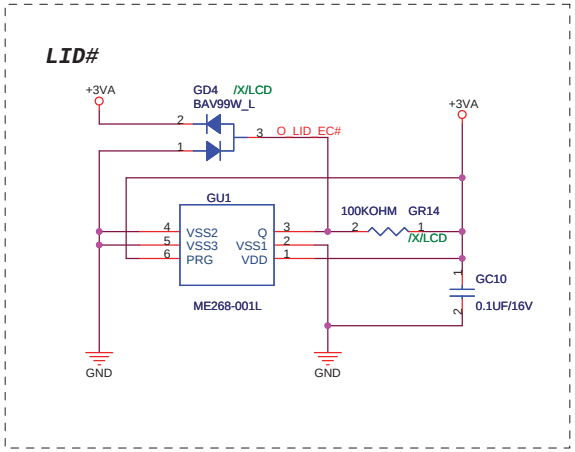

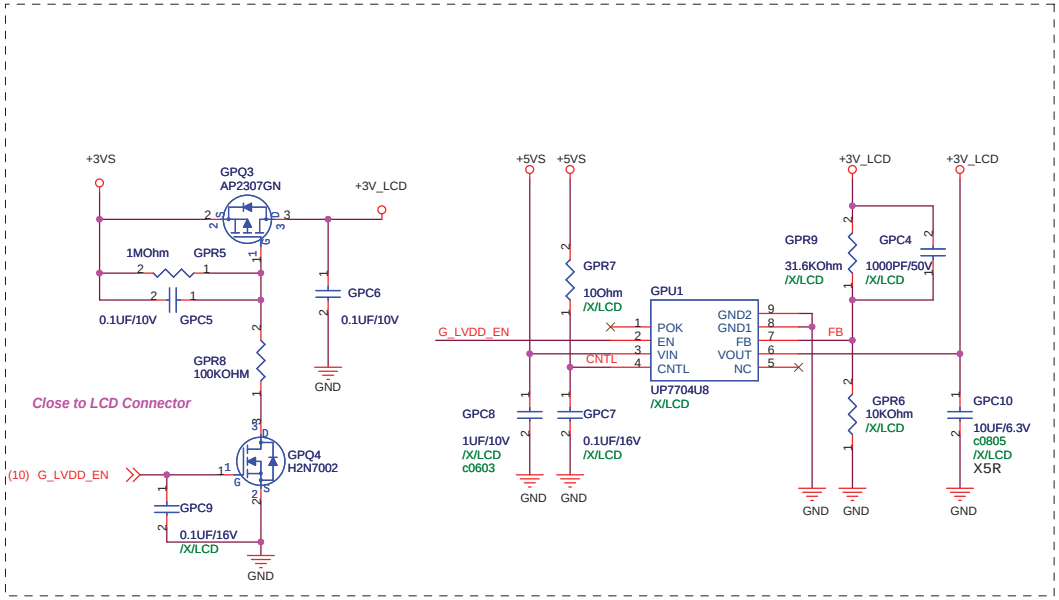

http://hobi-elektronika.net

ASUS	Title : LCD-CON for 10inch	
ASUSTek Computer Inc.	Engineer: SUSAN_SHI	
Size A3	Project Name Standard Circiut	Rev 0.1B
Date: Tuesday, December 09, 2008	Sheet 24 of 51	

ASUS	Title : onboard flash		
ASUSTek Computer Inc.	Engineer: SUSAN_SHI		
Size A3	Project Name Standard Circiut		Rev 0.1B
Date: Tuesday, December 09, 2008	Sheet 25 of 51		

http://hobi-elektronika.net

SATA HDD Connector

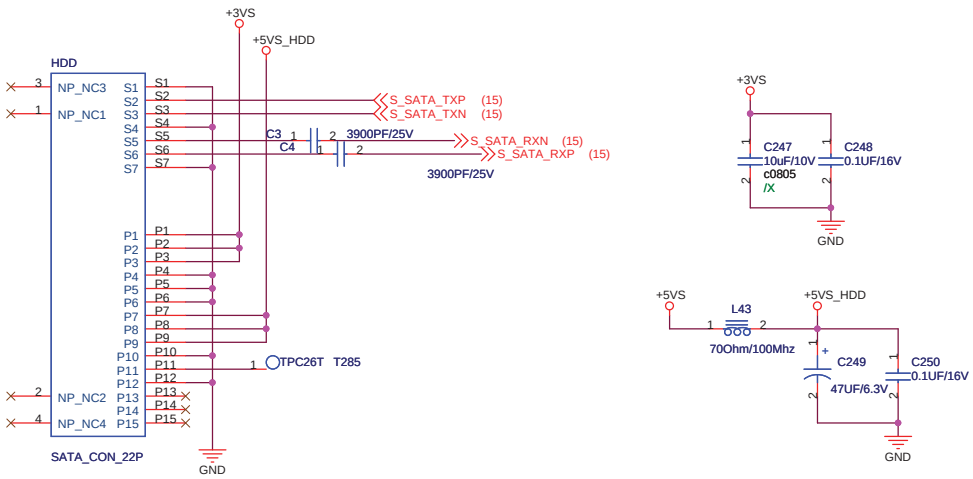

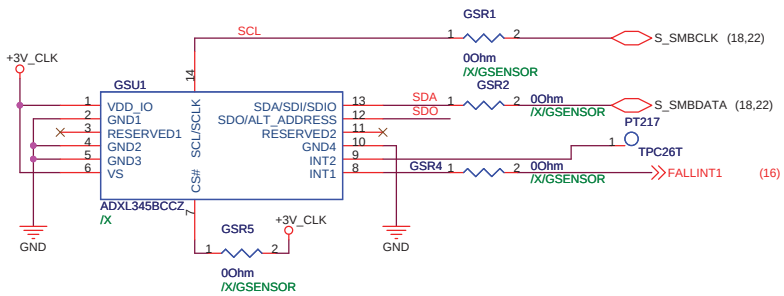

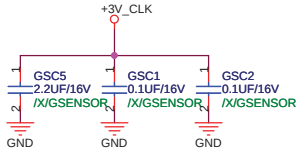

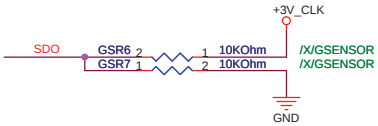

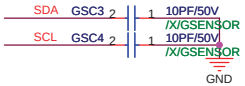

http://hobi-elektronika.net

ASUSTek Computer Inc.	Title : Flash-CON		
	Engineer: Henry_Yang		
Size A3	Project Name P703		Rev 1.2G
Date: Wednesday, December 10, 2008	Sheet 26 of 51		

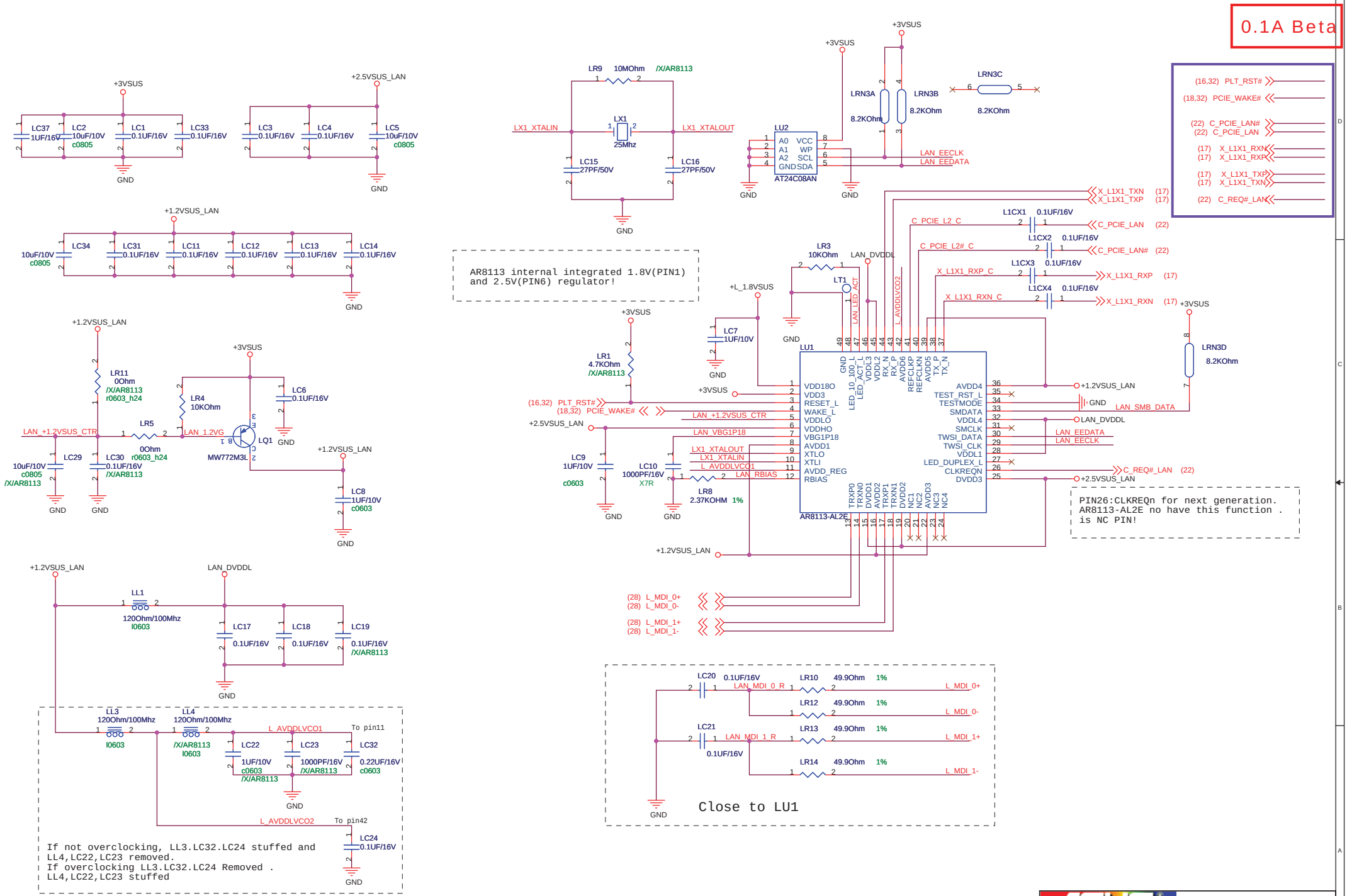

http://hobi-elektronika.net

0.1A Beta

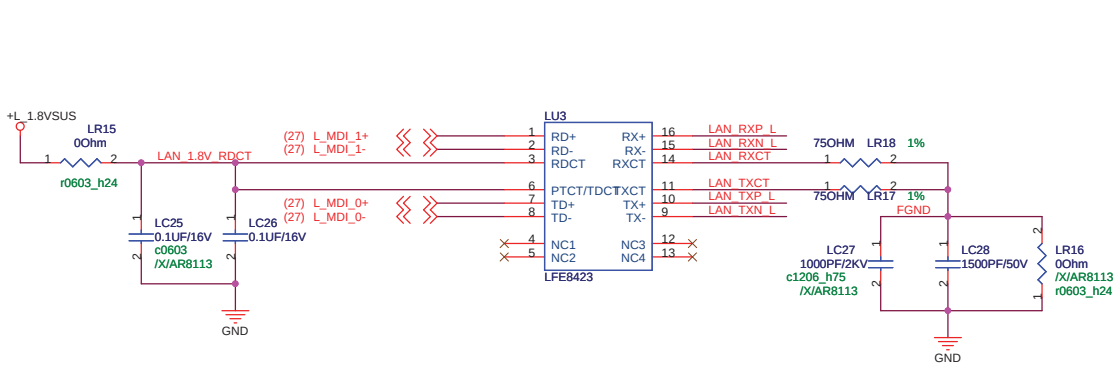

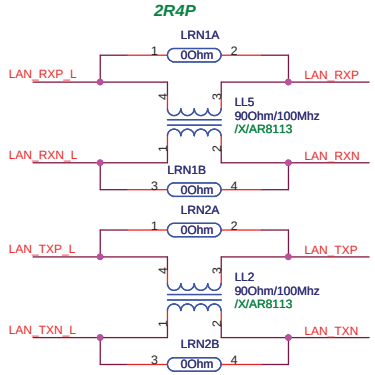

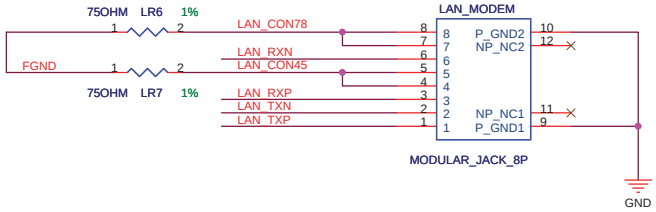

ASUS	Title : RJ45,RJ11,MDC		
ASUSTek Computer Inc.	Engineer: Henry_Yang		
Size A3	Project Name P703		Rev 1.2G
Date: Tuesday, December 09, 2008	Sheet 28 of 51		

http://hobi-elektronika.net

0.1A Beta

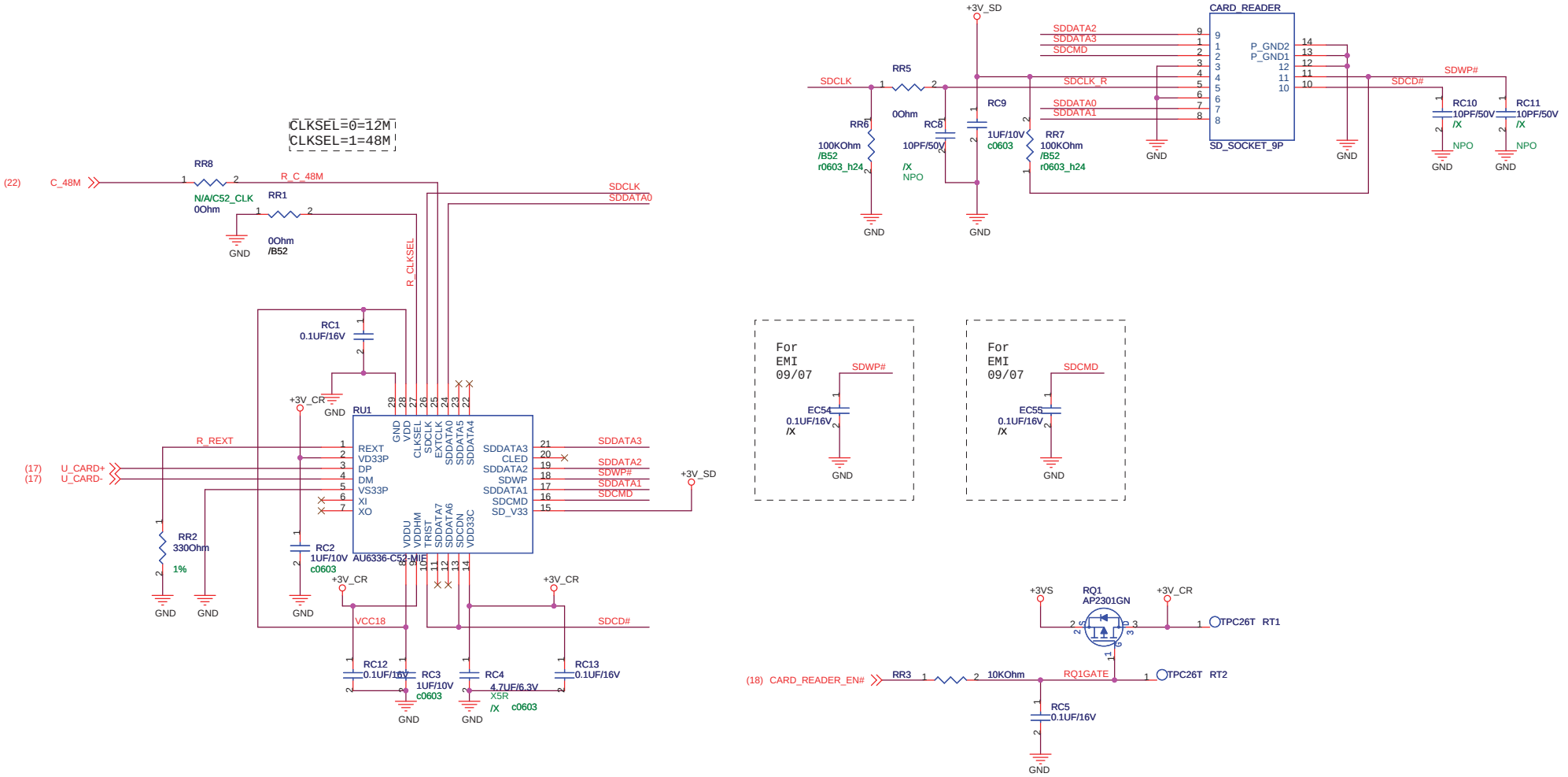

http://hobi-elektronika.net

ASUS	Title : Card Reader	
ASUSTek Computer Inc.	Engineer: Henry_Yang	
Size A3	Project Name P703	Rev 1.2G
Date: Tuesday, December 09, 2008	Sheet 29 of 51	

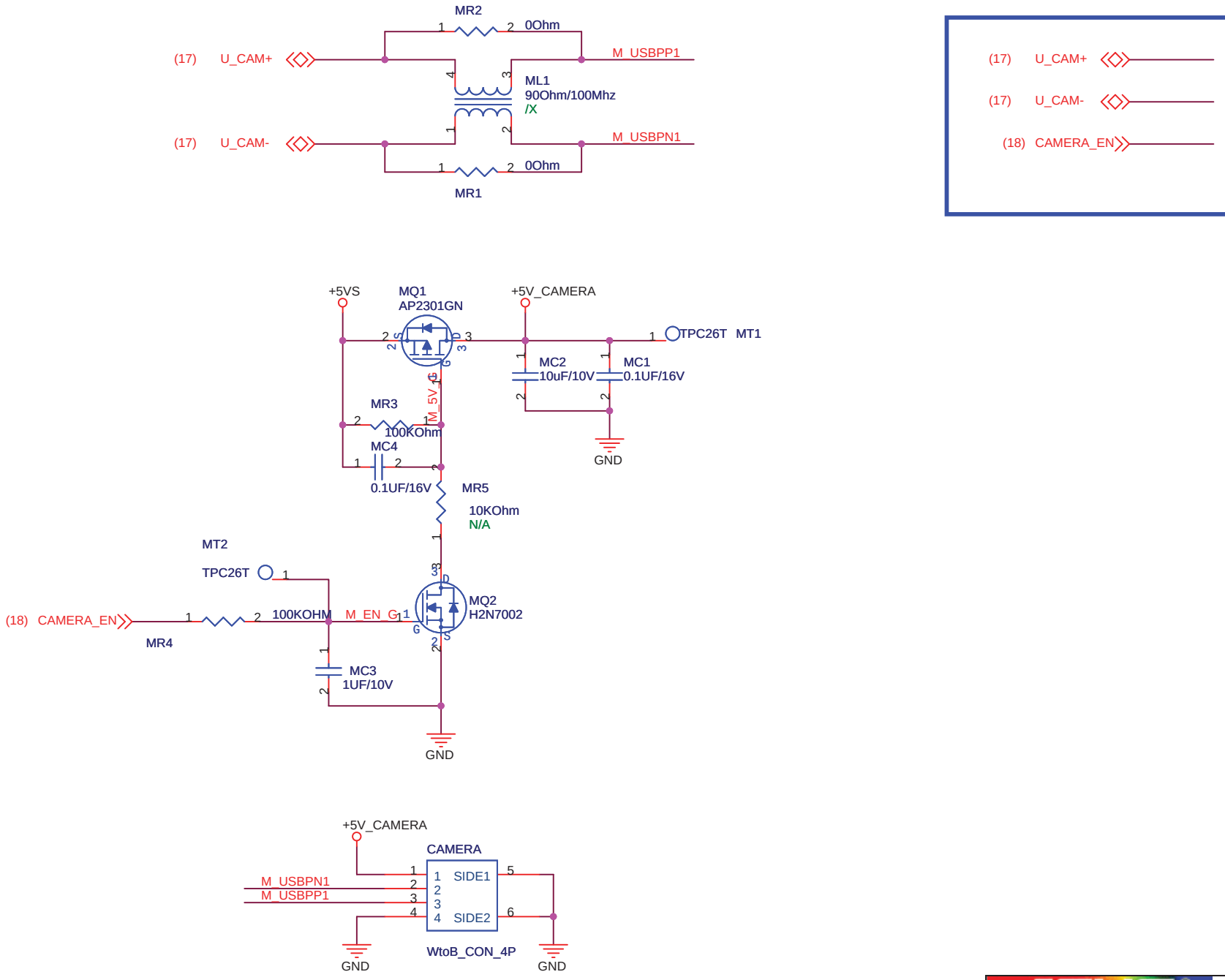

ASUSTek Computer Inc.	Title : Camera CONN		
	Engineer: Henry_Yang		
Size A4	Project Name P703		Rev 1.2G
Date: Tuesday, December 09, 2008	Sheet 30 of 51		

http://hobi-elektronika.net

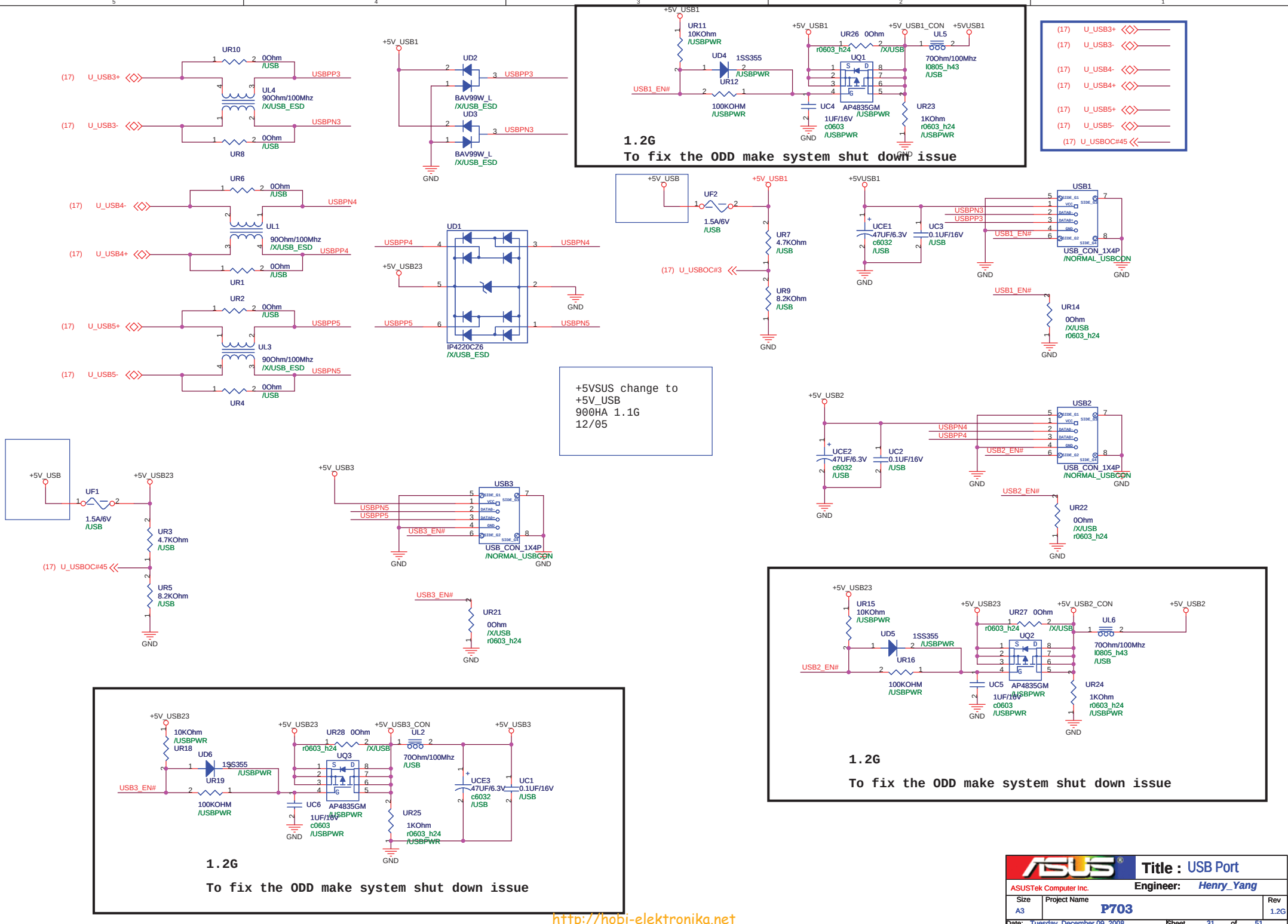
UR10
0Ohm
/USB
(17) U_USB3+
USBPP3
UL4
90Ohm/100Mhz
/X/USB_ESD
(17) U_USB3-
USBPN3
UR8
+5V_USB1
UD2
BAV99W_L
/X/USB_ESD
UD3
GND
UR6
(17) U_USB4-
USBPN4
UL1
(17) U_USB4+
UR1
UR2
(17) U_USB5+
USBPP5
UL3
(17) U_USB5-
UR4
UD1
USBPP4
+5V_USB23
USBPN4
USBPP5
USBPN5
IP4220CZ6
/X/USB_ESD
+5V_USB1
UR11
10KOhm
/USBPWR
UD4
1SS355
/USBPWR
UR12
USB1_EN#
100KOHM
/USBPWR
UR26 0Ohm
r0603_h24
/X/USB
+5V_USB1_CON
+5VUSB1
UL5
70Ohm/100Mhz
l0805_h43
/USB
UQ1
UC4
AP4835GM
/USBPWR
1UF/16V
c0603
/USBPWR
UR23
1KOhm
r0603_h24
/USBPWR
1.2G
To fix the ODD make system shut down issue
(17) U_USB3+
(17) U_USB3-
(17) U_USB4-
(17) U_USB4+
(17) U_USB5+
(17) U_USB5-
(17) U_USBOC#45
+5V_USB
UF2
1.5A/6V
/USB
UR7
4.7KOhm
/USB
(17) U_USBOC#3
UR9
8.2KOhm
/USB
UCE1
47UF/6.3V
c6032
/USB
UC3
0.1UF/16V
/USB
USBPN3
USBPP3
USB1_EN#
USB1
USB_CON_1X4P
/NORMAL_USBCON
UR14
0Ohm
/X/USB
r0603_h24
+5V_USB2
UCE2
47UF/6.3V
c6032
/USB
UC2
0.1UF/16V
/USB
USBPN4
USBPP4
USB2_EN#
USB2
UR22
0Ohm
/X/USB
r0603_h24
+5V_USB
UF1
1.5A/6V
/USB
+5V_USB23
UR3
4.7KOhm
/USB
(17) U_USBOC#45
UR5
8.2KOhm
/USB
+5V_USB3
USBPN5
USBPP5
USB3_EN#
USB3
USB_CON_1X4P
/NORMAL_USBCON
UR21
0Ohm
/X/USB
r0603_h24
+5V_USB23
UR15
10KOhm
/USBPWR
UD5
1SS355
/USBPWR
UR16
USB2_EN#
100KOHM
/USBPWR
UR27 0Ohm
r0603_h24
/X/USB
+5V_USB2_CON
UL6
70Ohm/100Mhz
l0805_h43
/USB
UQ2
UC5
AP4835GM
/USBPWR
1UF/16V
c0603
/USBPWR
UR24
1KOhm
r0603_h24
/USBPWR
1.2G
To fix the ODD make system shut down issue
+5V_USB23
10KOhm
/USBPWR
UR18
UD6
1SS355
/USBPWR
UR19
USB3_EN#
100KOHM
/USBPWR
UR28 0Ohm
r0603_h24
/X/USB
+5V_USB3_CON
UL2
70Ohm/100Mhz
/USB
UQ3
UC6
AP4835GM
/USBPWR
1UF/16V
c0603
/USBPWR
UR25
1KOhm
r0603_h24
/USBPWR
+5V_USB3
UC3
47UF/6.3V
c6032
/USB
UC1
0.1UF/16V
/USB
1.2G
To fix the ODD make system shut down issue
+5VSUS change to
+5V_USB
900HA 1.1G
12/05
ASUSTek Computer Inc.
Title : USB Port
Engineer: Henry_Yang
Size A3
Project Name P703
Rev 1.2G
Date: Tuesday, December 09, 2008
Sheet 31 of 51
http://hobi-elektronika.net

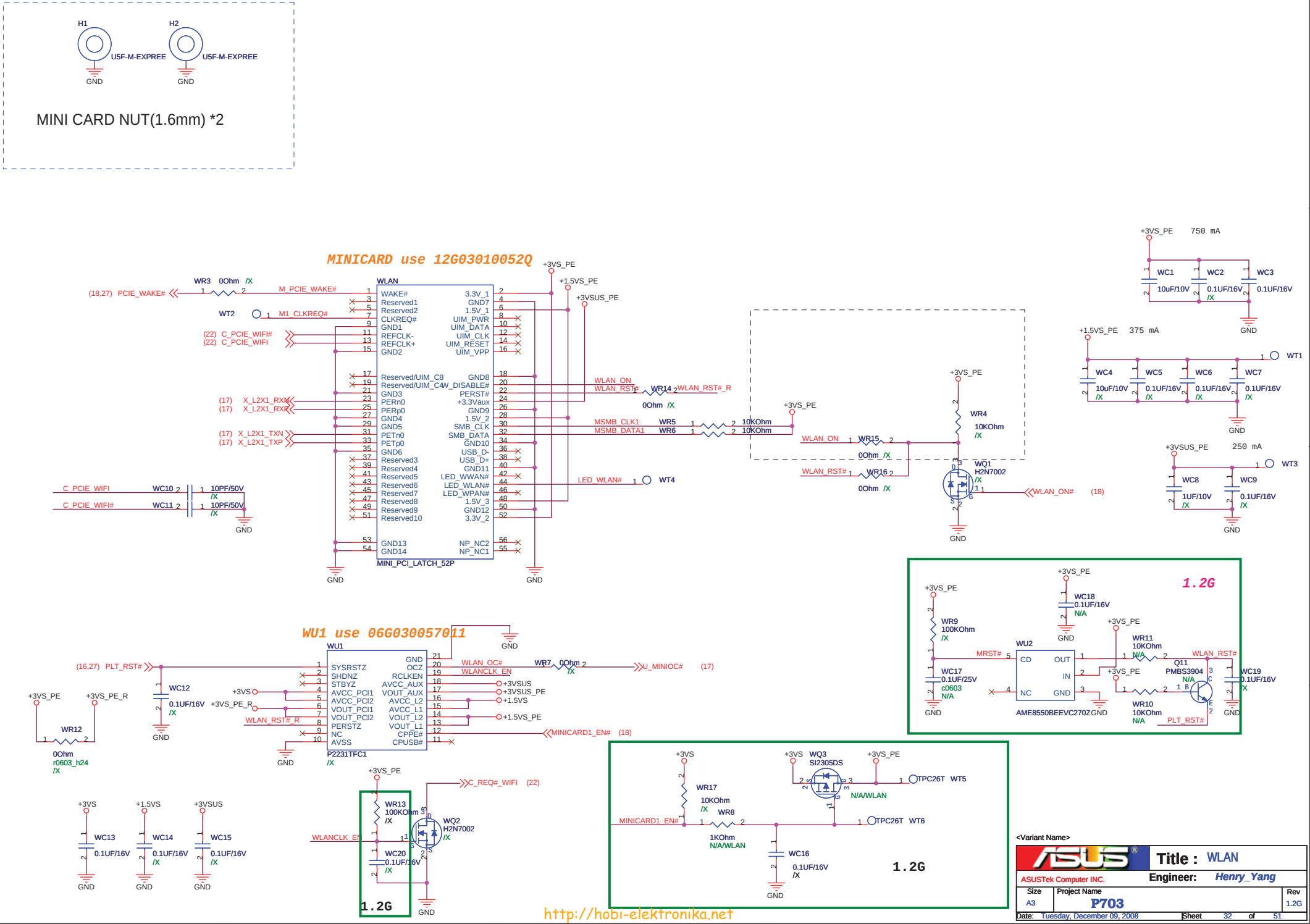
H1
H2
U5F-M-EXPREE
U5F-M-EXPREE
GND
GND
MINI CARD NUT(1.6mm) *2
MINICARD use 12G03010052Q
WLAN
MINI_PCI_LATCH_52P
WAKE#
Reserved1
Reserved2
CLKREQ#
GND1
REFCLK-
REFCLK+
GND2
Reserved/UIM_C8
Reserved/UIM_C4
GND3
PERn0
PERp0
GND4
GND5
PETn0
PETp0
GND6
Reserved3
Reserved4
Reserved5
Reserved6
Reserved7
Reserved8
Reserved9
Reserved10
GND13
GND14
3.3V_1
GND7
1.5V_1
UIM_PWR
UIM_DATA
UIM_CLK
UIM_RESET
UIM_VPP
GND8
W_DISABLE#
PERST#
+3.3Vaux
GND9
1.5V_2
SMB_CLK
SMB_DATA
GND10
USB_D-
USB_D+
GND11
LED_WWAN#
LED_WLAN#
LED_WPAN#
1.5V_3
GND12
3.3V_2
NP_NC2
NP_NC1
WR3 0Ohm /X
(18,27) PCIE_WAKE#
M_PCIE_WAKE#
WT2
M1_CLKREQ#
(22) C_PCIE_WIFI#
(22) C_PCIE_WIFI
(17) X_L2X1_RXN
(17) X_L2X1_RXP
(17) X_L2X1_TXN
(17) X_L2X1_TXP
C_PCIE_WIFI
C_PCIE_WIFI#
WC10 10PF/50V /X
WC11 10PF/50V /X
WLAN_ON
WLAN_RST#
WR14 0Ohm /X
WLAN_RST#_R
MSMB_CLK1
MSMB_DATA1
WR5 10KOhm
WR6 10KOhm
LED_WLAN#
WT4
+3VS_PE
+1.5VS_PE
+3VSUS_PE
WR15 0Ohm /X
WR16 0Ohm /X
WR4 10KOhm /X
WQ1 H2N7002 /X
WLAN_ON#
(18)
+3VS_PE 750 mA
WC1 10uF/10V
WC2 0.1UF/16V /X
WC3 0.1UF/16V
+1.5VS_PE 375 mA
WT1
WC4 10uF/10V /X
WC5 0.1UF/16V /X
WC6 0.1UF/16V /X
WC7 0.1UF/16V /X
+3VSUS_PE 250 mA
WT3
WC8 1UF/10V /X
WC9 0.1UF/16V /X
WU1 use 06G030057011
WU1
P2231TFC1 /X
SYSRSTZ
SHDNZ
STBYZ
AVCC_PCI1
AVCC_PCI2
VOUT_PCI1
VOUT_PCI2
PERSTZ
NC
AVSS
GND
OCZ
RCLKEN
AVCC_AUX
VOUT_AUX
AVCC_L2
AVCC_L1
VOUT_L2
VOUT_L1
CPPE#
CPUSB#
(16,27) PLT_RST#
WLAN_OC#
WLANCLK_EN
WR7 0Ohm /X
U_MINIOC#
(17)
+3VS
+3VSUS
+3VSUS_PE
+1.5VS
+1.5VS_PE
WLAN_RST#_R
MINICARD1_EN#
(18)
+3VS_PE_R
WC12 0.1UF/16V /X
WR12 0Ohm r0603_h24 /X
WC13 0.1UF/16V
WC14 0.1UF/16V /X
WC15 0.1UF/16V /X
WLANCLK_EN
WR13 100KOhm /X
WQ2 H2N7002 /X
WC20 0.1UF/16V /X
C_REQ#_WIFI
(22)
1.2G
1.2G
WC18 0.1UF/16V N/A
WR9 100KOhm /X
WC17 0.1UF/25V c0603 N/A
WU2
AME8550BEEVC270Z
CD
NC
OUT
IN
GND
MRST#
WR11 10KOhm N/A
WR10 10KOhm N/A
Q11 PMBS3904 N/A
WC19 0.1UF/16V /X
WLAN_RST#
PLT_RST#
WR17 10KOhm /X
WR8 1KOhm N/A/WLAN
WQ3 SI2305DS
N/A/WLAN
TPC26T WT5
TPC26T WT6
WC16 0.1UF/16V /X
1.2G
http://hobi-elektronika.net
<Variant Name>
Title : WLAN
ASUSTek Computer INC.
Engineer: Henry_Yang
Size A3
Project Name P703
Rev 1.2G
Date: Tuesday, December 09, 2008
Sheet 32 of 51

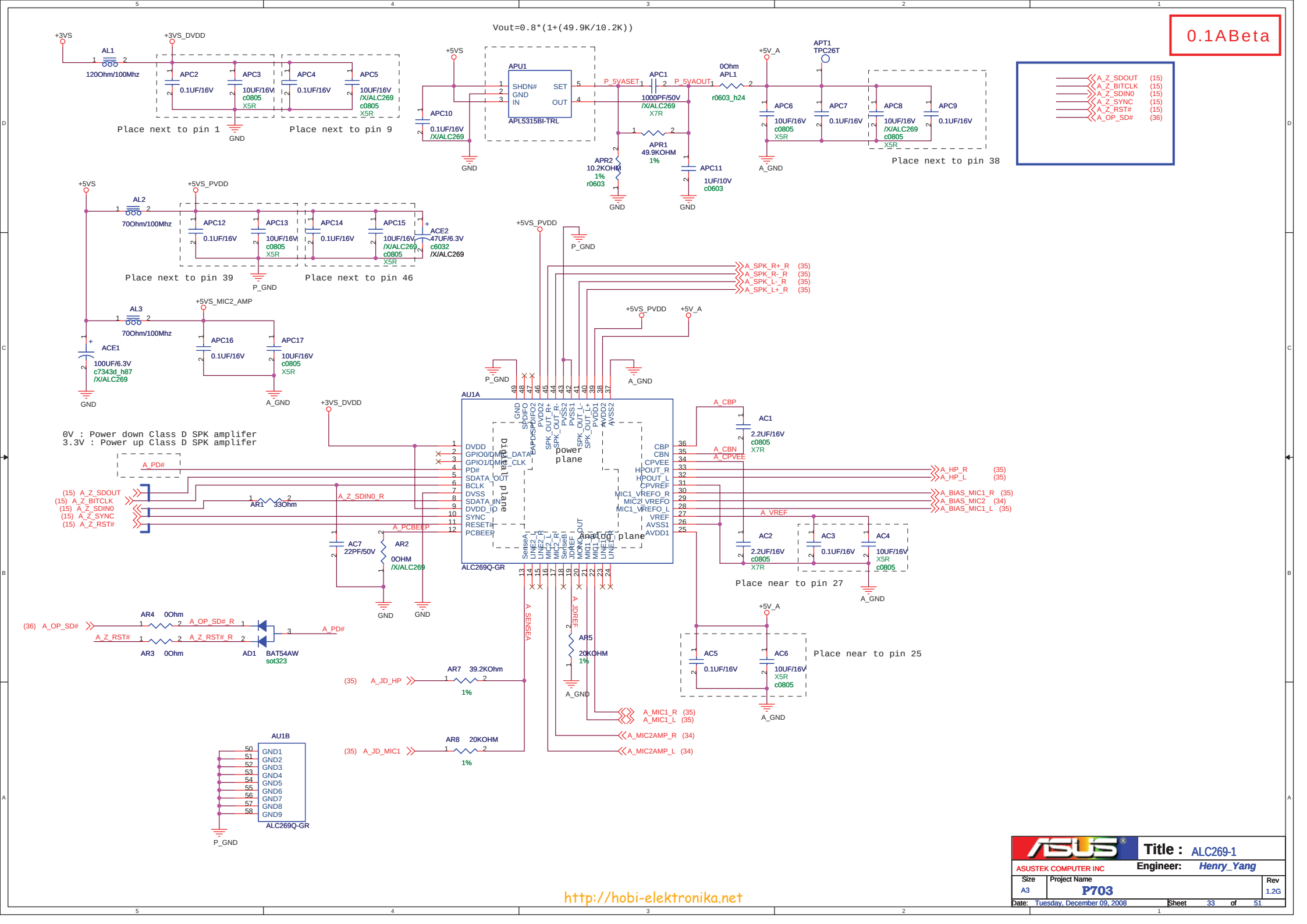
0.1ABeta
Vout=0.8*(1+(49.9K/10.2K))
+3VS
+3VS_DVDD
AL1
120Ohm/100Mhz
APC2 0.1UF/16V
APC3 10UF/16V c0805 X5R
APC4 0.1UF/16V
APC5 10UF/16V /X/ALC269 c0805 X5R
Place next to pin 1
Place next to pin 9
GND
+5VS
APU1
SHDN# SET
GND
IN OUT
APL5315BI-TRL
APC10 0.1UF/16V /X/ALC269
P_5VASET
APC1 1000PF/50V /X/ALC269 X7R
P_5VAOUT
APR1 49.9KOHM 1%
APR2 10.2KOHM 1% r0603
APC11 1UF/10V c0603
0Ohm APL1 r0603_h24
+5V_A
APT1 TPC26T
APC6 10UF/16V c0805 X5R
APC7 0.1UF/16V
APC8 10UF/16V /X/ALC269 c0805 X5R
APC9 0.1UF/16V
Place next to pin 38
A_GND
A_Z_SDOUT (15)
A_Z_BITCLK (15)
A_Z_SDIN0 (15)
A_Z_SYNC (15)
A_Z_RST# (15)
A_OP_SD# (36)
+5VS_PVDD
AL2
70Ohm/100Mhz
APC12 0.1UF/16V
APC13 10UF/16V c0805 X5R
APC14 0.1UF/16V
APC15 10UF/16V /X/ALC269 c0805 X5R
ACE2 47UF/6.3V c6032 /X/ALC269
Place next to pin 39
Place next to pin 46
P_GND
AL3
70Ohm/100Mhz
+5VS_MIC2_AMP
ACE1 100UF/6.3V c7343d_h87 /X/ALC269
APC16 0.1UF/16V
APC17 10UF/16V c0805 X5R
A_SPK_R+_R (35)
A_SPK_R-_R (35)
A_SPK_L-_R (35)
A_SPK_L+_R (35)
0V : Power down Class D SPK amplifer
3.3V : Power up Class D SPK amplifer
A_PD#
(15) A_Z_SDOUT
(15) A_Z_BITCLK
(15) A_Z_SDIN0
(15) A_Z_SYNC
(15) A_Z_RST#
AR1 33Ohm
A_Z_SDIN0_R
A_PCBEEP
AC7 22PF/50V
AR2 0OHM /X/ALC269
AU1A
ALC269Q-GR
DVDD
GPIO0/DMIC_DATA
GPIO1/DMIC_CLK
PD#
SDATA_OUT
BCLK
DVSS
SDATA_IN
DVDD_IO
SYNC
RESET#
PCBEEP
digital plane
power plane
Analog plane
CBP
CBN
CPVEE
HPOUT_R
HPOUT_L
CPVREF
MIC1_VREFO_R
MIC2_VREFO
MIC1_VREFO_L
VREF
AVSS1
AVDD1
A_CBP
A_CBN
A_CPVEE
AC1 2.2UF/16V c0805 X7R
A_HP_R (35)
A_HP_L (35)
A_BIAS_MIC1_R (35)
A_BIAS_MIC2 (34)
A_BIAS_MIC1_L (35)
A_VREF
AC2 2.2UF/16V c0805 X7R
AC3 0.1UF/16V
AC4 10UF/16V X5R c0805
Place near to pin 27
(36) A_OP_SD#
AR4 0Ohm
A_OP_SD#_R
A_Z_RST#
A_Z_RST#_R
AR3 0Ohm
AD1 BAT54AW sot323
A_PD#
A_SENSEA
A_JDREF
AR5 20KOHM 1%
AC5 0.1UF/16V
AC6 10UF/16V X5R c0805
Place near to pin 25
(35) A_JD_HP
AR7 39.2KOhm 1%
A_MIC1_R (35)
A_MIC1_L (35)
A_MIC2AMP_R (34)
A_MIC2AMP_L (34)
(35) A_JD_MIC1
AR8 20KOHM 1%
AU1B
GND1
GND2
GND3
GND4
GND5
GND6
GND7
GND8
GND9
ALC269Q-GR
http://hobi-elektronika.net
ASUSTEK COMPUTER INC
Title : ALC269-1
Engineer: Henry_Yang
Size A3
Project Name P703
Rev 1.2G
Date: Tuesday, December 09, 2008
Sheet 33 of 51

0.1ABeta

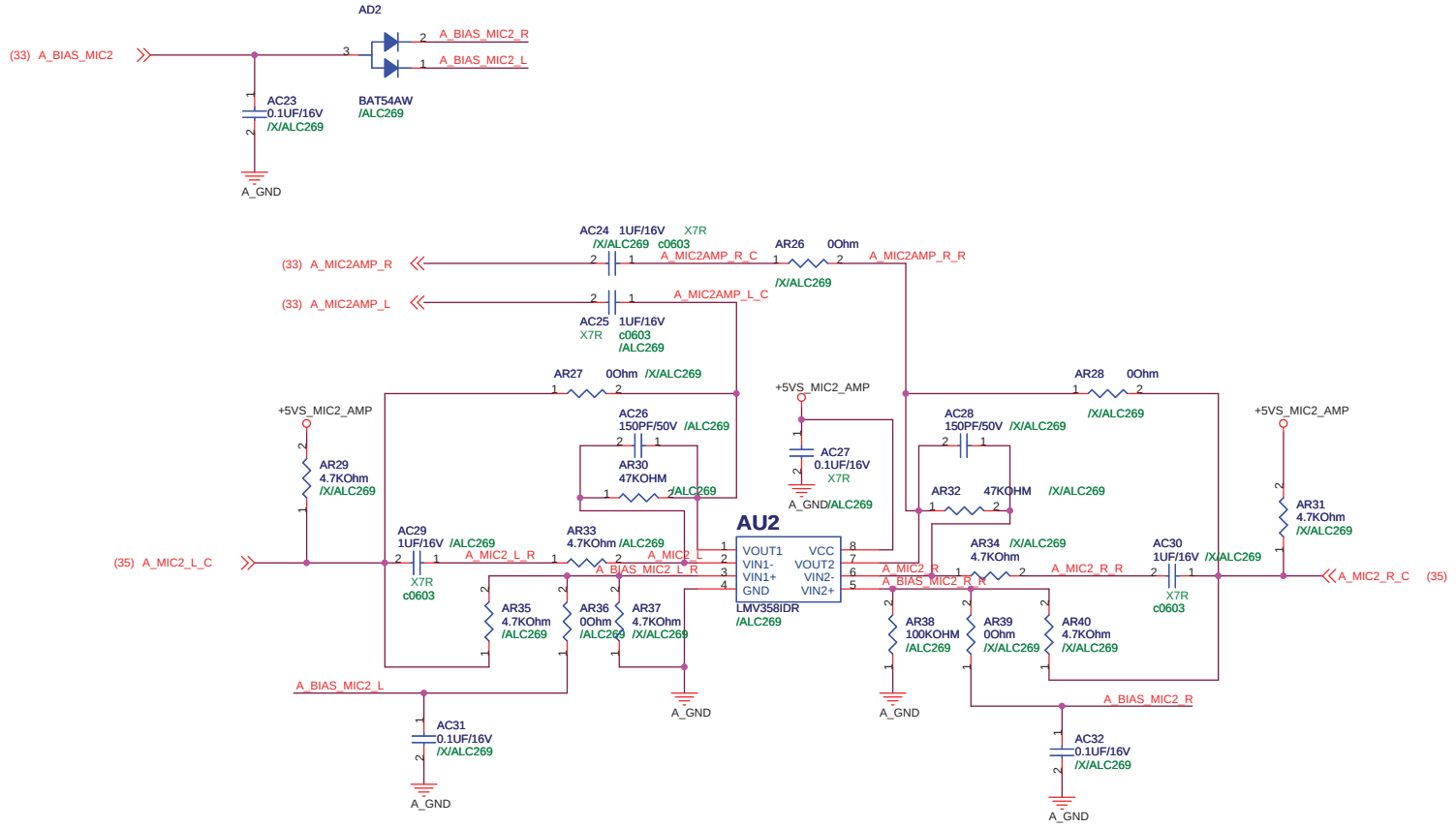

Internal MIC Amp.

FL = 33.86kHz, FH = 22.5kHz

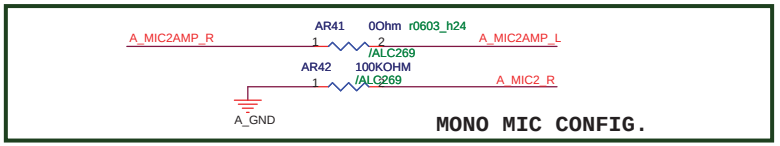

http://hobi-elektronika.net

ASUS	Title : Internal MIC AMP		
ASUSTEK COMPUTER INC	Engineer: Henry_Yang		
Size A3	Project Name P703		Rev 1.2G
Date: Tuesday, December 09, 2008	Sheet 34 of 51		

Internal MIC

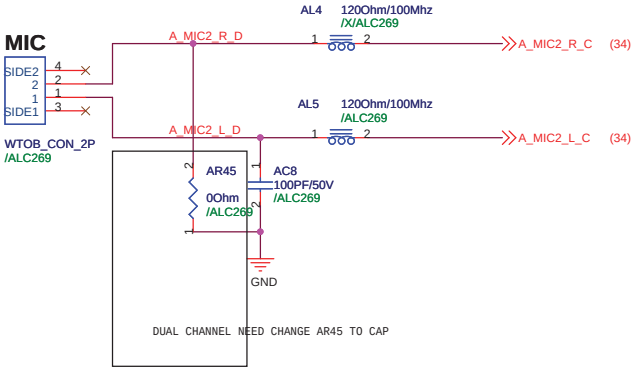

SPEAKER

Demodulation Filter
Placement near
Audio Codec

<<Attention>>
you can use LC filter(AR9,AR14,AR15,AR16
mount 8.2uH L ;and mount AC10,AC13) to
eliminate the EMI(please don't use
general beads,because they may influence
the THD+N quality) , AC9/AC11/AC12/AC14
are reserved for EMI fine-tune ; For EMI
issue, All L and C should near to codec

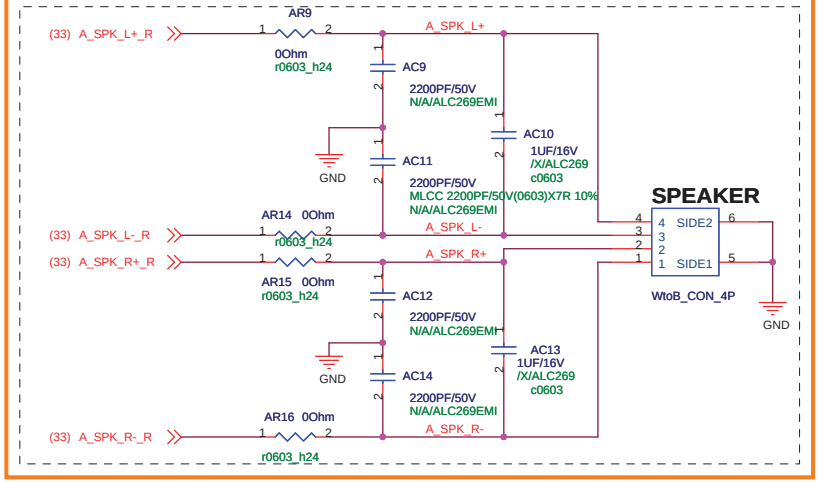

MIC JACK

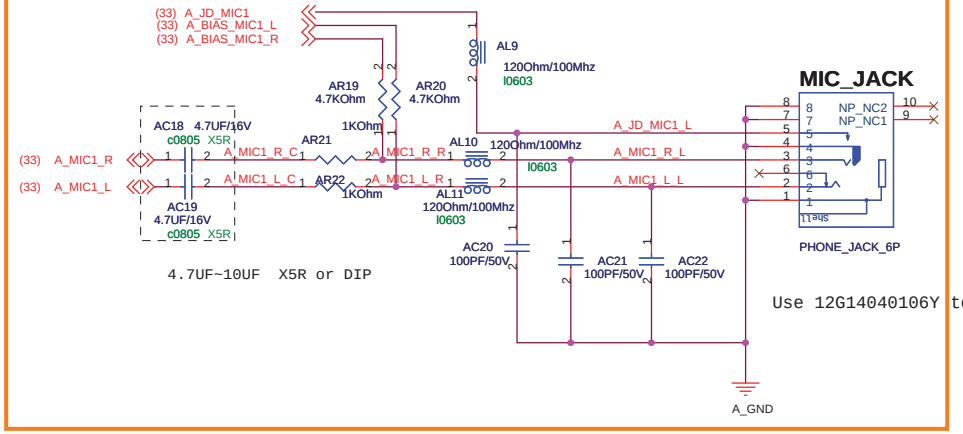

4.7UF~10UF X5R or DIP

Use 12G14040106Y to instead.

HEADPHONE

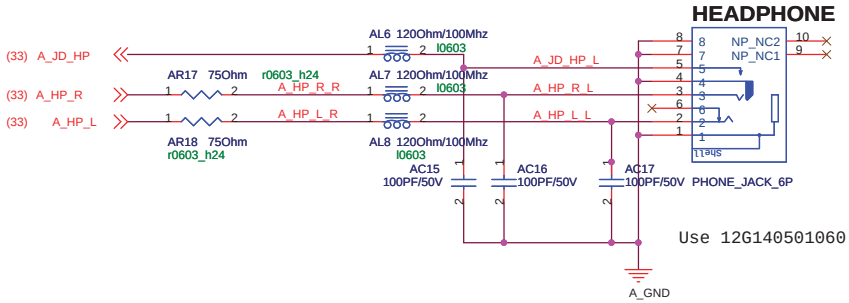

Use 12G140501060 to instead.

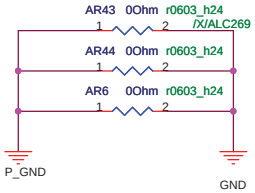

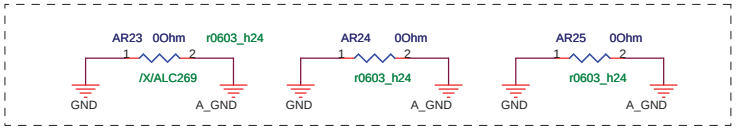

AR24, AR25 can use
0.1UF 11G233310432320
for EMI

ASUSTEK COMPUTER INC	Title : Jack&Speaker		
	Engineer: Henry_Yang		
Size A3	Project Name P703		Rev 1.2G
Date: Tuesday, December 09, 2008	Sheet 35 of 51		

http://hobi-elektronika.net

0.1 A Beta

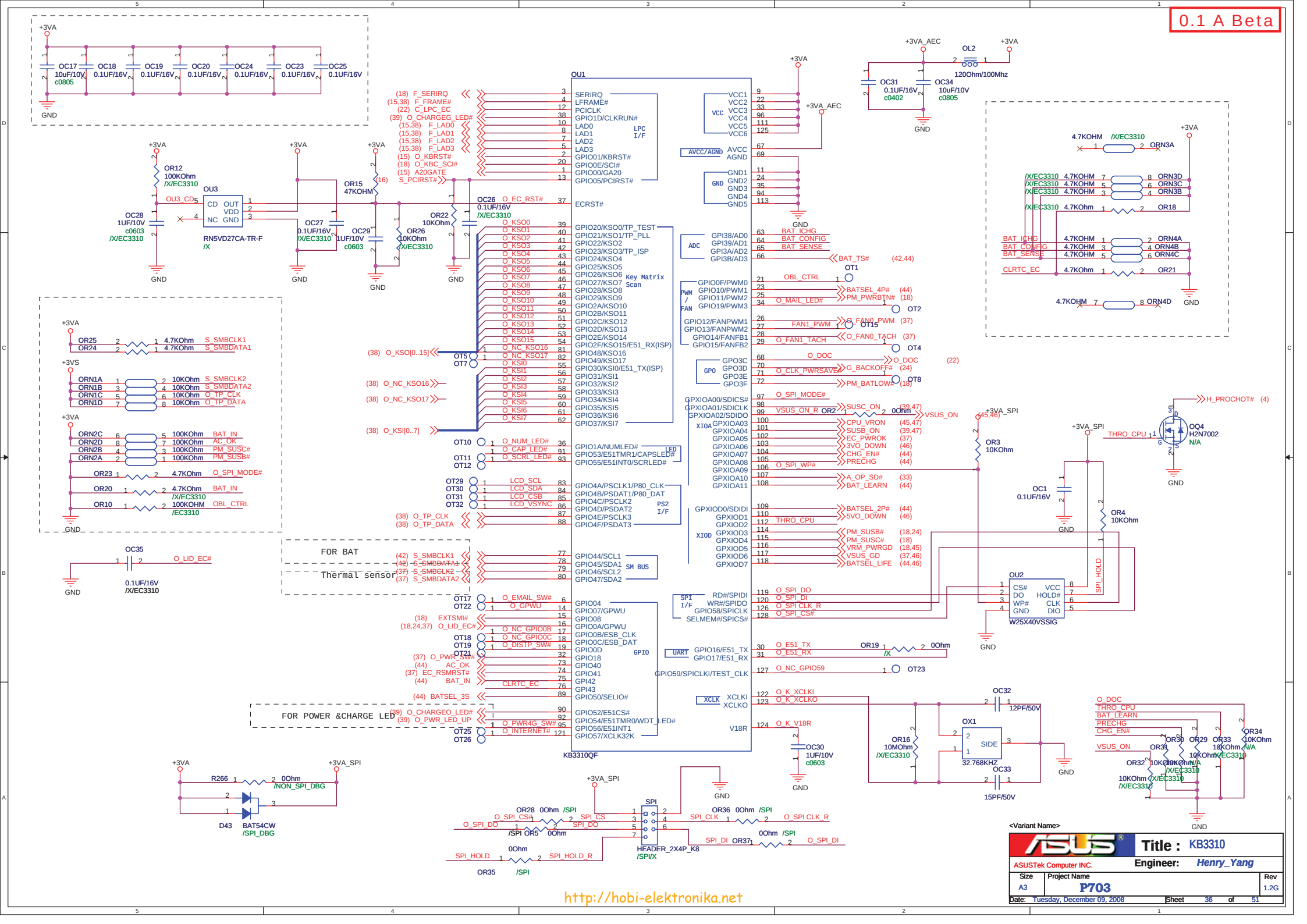

http://hobi-elektronika.net

0.1 A Beta

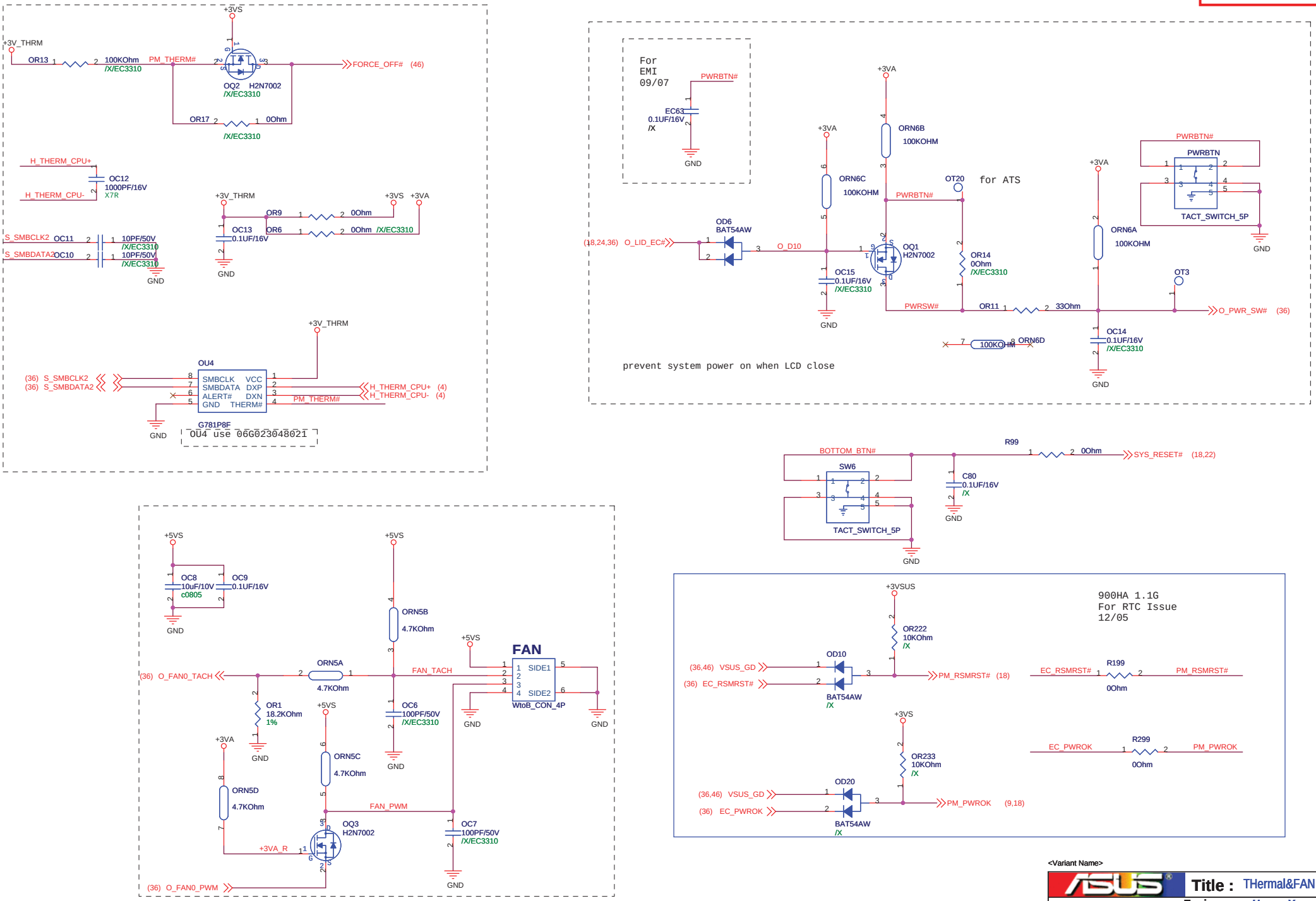

<Variant Name>

ASUS	Title :	THermal&FAN
ASUSTek Computer INC.	Engineer:	Henry_Yang
Size: A3	Project Name: P703	Rev: 1.2G
Date: Tuesday, December 09, 2008	Sheet 37 of 51	

http://hobi-elektronika.net

0.1 A Beta

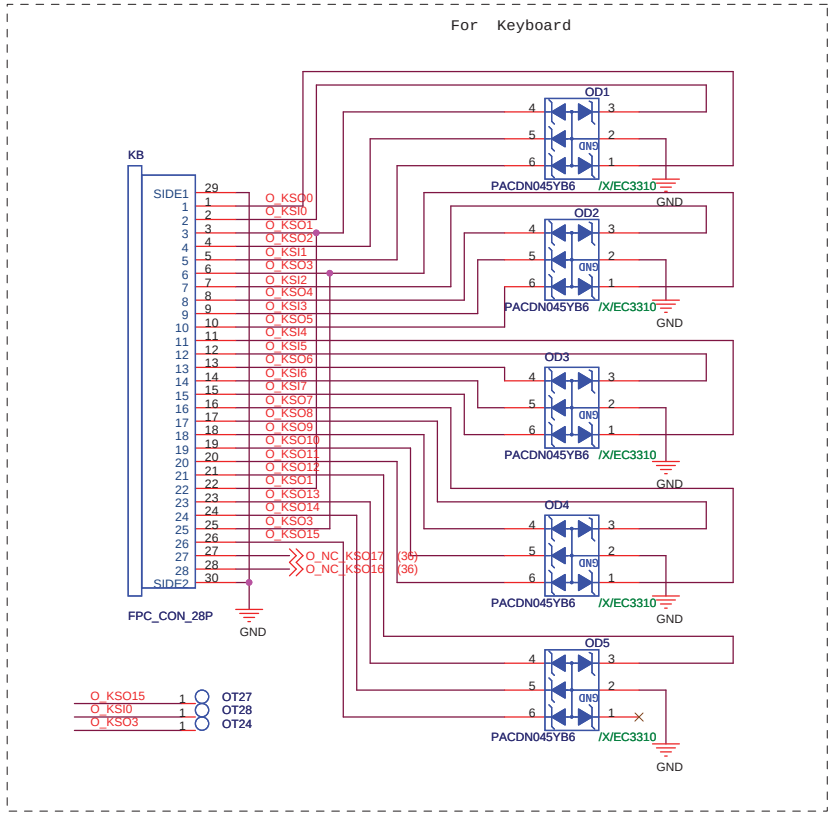

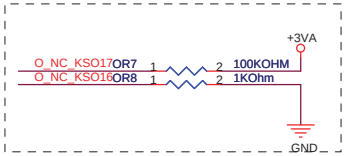

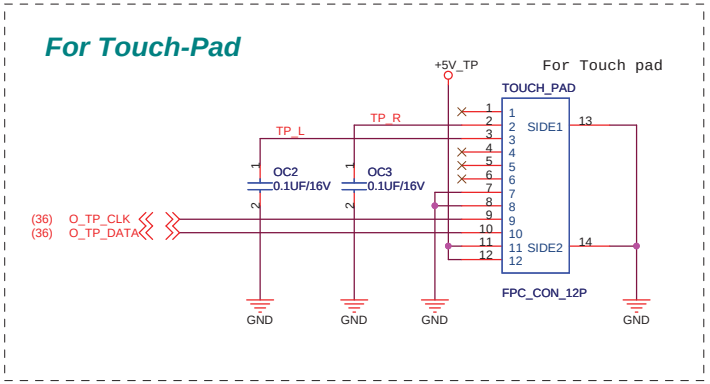

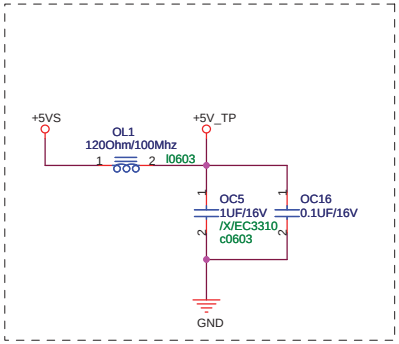

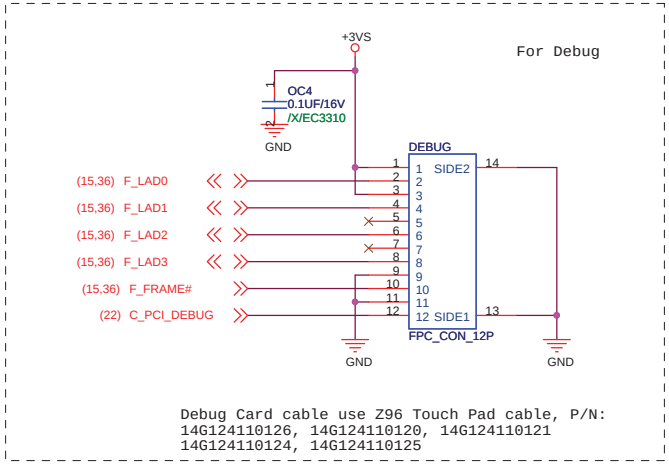

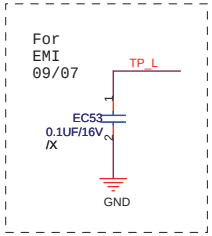

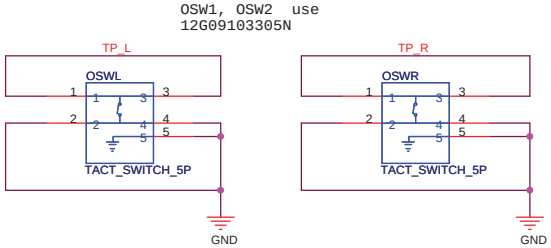

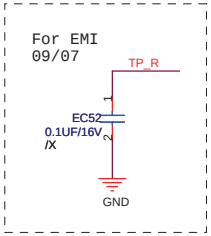

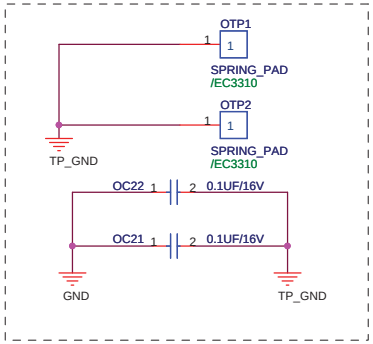

http://hobi-elektronika.net

<Variant Name>

ASUS	Title : KB&TP	
ASUSTek Computer INC.	Engineer: Henry_Yang	
Size A3	Project Name P703	Rev 1.2G
Date: Tuesday, December 09, 2008	Sheet 38 of 51	

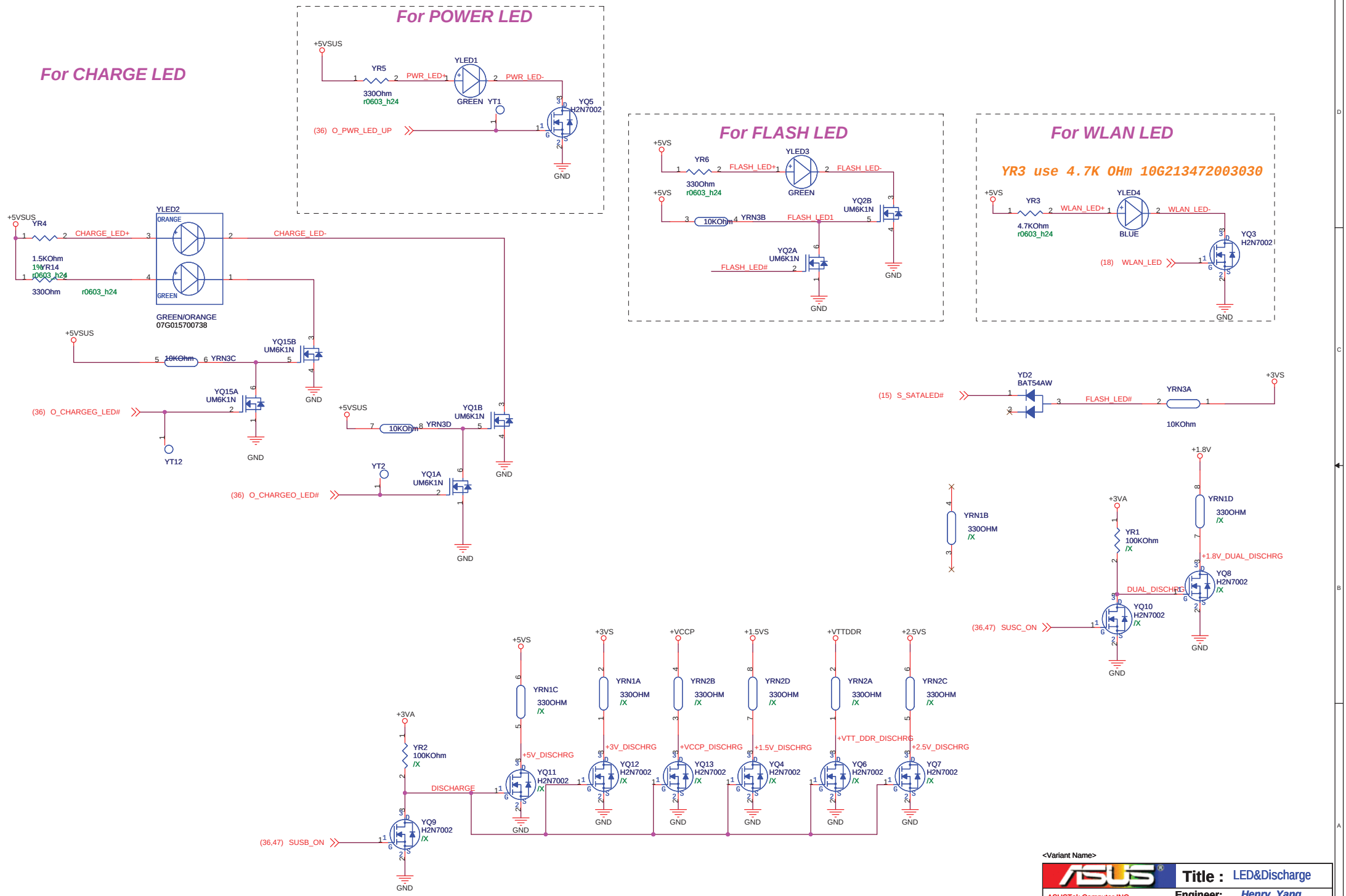
For POWER LED
For CHARGE LED
For FLASH LED
For WLAN LED
YR3 use 4.7K OHm 10G213472003030
+5VSUS
YR5
330Ohm
r0603_h24
PWR_LED+
PWR_LED-
YLED1
GREEN
YT1
YQ5
H2N7002
(36) O_PWR_LED_UP
GND
YR4
1.5KOhm
1%
YR14
330Ohm
r0603_h24
CHARGE_LED+
CHARGE_LED-
YLED2
ORANGE
GREEN
GREEN/ORANGE
07G015700738
YQ15B
UM6K1N
10KOhm
YRN3C
YQ15A
(36) O_CHARGEG_LED#
YT12
YQ1B
YRN3D
YQ1A
YT2
(36) O_CHARGEO_LED#
+5VS
YR6
FLASH_LED+
FLASH_LED-
YLED3
YQ2B
YRN3B
FLASH_LED1
YQ2A
FLASH_LED#
YR3
WLAN_LED+
WLAN_LED-
YLED4
BLUE
4.7KOhm
YQ3
(18) WLAN_LED
YD2
BAT54AW
(15) S_SATALED#
YRN3A
+3VS
+1.8V
YRN1B
YRN1D
+3VA
YR1
100KOhm
+1.8V_DUAL_DISCHRG
YQ8
DUAL_DISCHRG
YQ10
(36,47) SUSC_ON
YRN1C
YRN1A
YRN2B
YRN2D
YRN2A
YRN2C
+VCCP
+1.5VS
+VTTDDR
+2.5VS
YR2
100KOhm
DISCHARGE
+5V_DISCHRG
+3V_DISCHRG
+VCCP_DISCHRG
+1.5V_DISCHRG
+VTT_DDR_DISCHRG
+2.5V_DISCHRG
YQ11
YQ12
YQ13
YQ4
YQ6
YQ7
YQ9
(36,47) SUSB_ON
http://hobi-elektronika.net
<Variant Name>
Title : LED&Discharge
ASUSTek Computer INC.
Engineer: Henry_Yang
Size A3
Project Name P703
Rev 1.2G
Date: Tuesday, December 09, 2008
Sheet 39 of 51

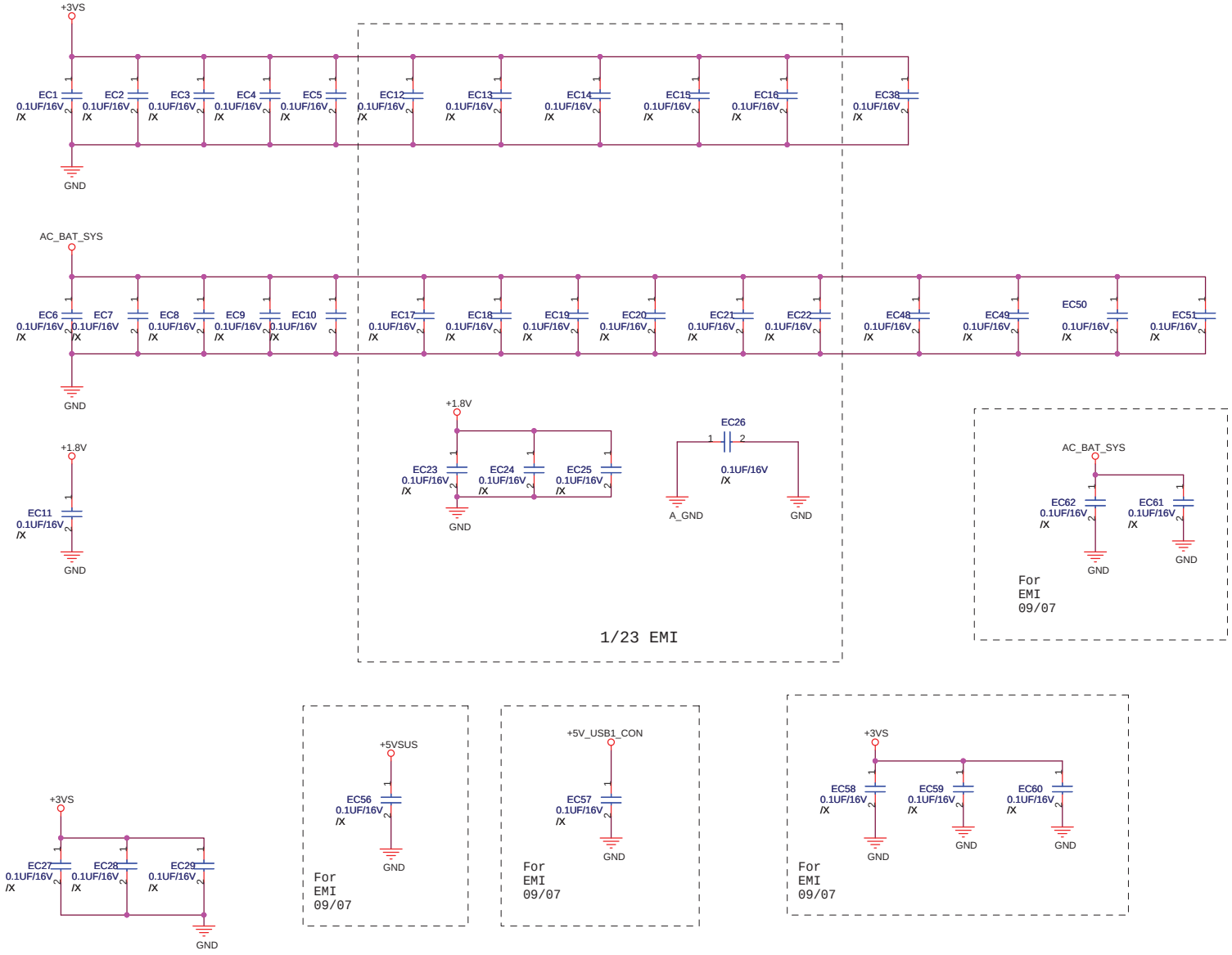

ASUSTEK COMPUTER INC	Title : EMI	
	Engineer: Henry_Yang	
Size A3	Project Name P703	Rev 1.2G
Date: Tuesday, December 09, 2008	Sheet 40 of 51	

http://hobi-elektronika.net

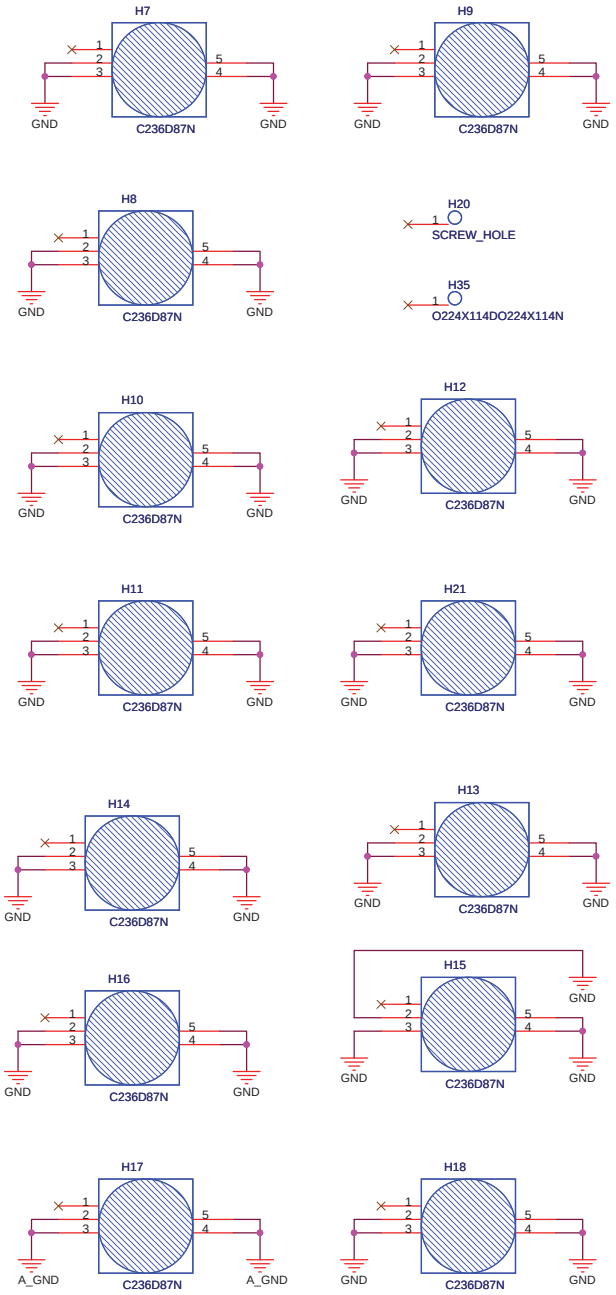

http://hobi-elektronika.net

<Variant Name>

ASUS	Title : Srew Hole	
ASUSTek Computer INC.	Engineer: Henry_Yang	
Size A3	Project Name P703	Rev 1.2G
Date: Tuesday, December 09, 2008	Sheet 41 of 51	

DC IN

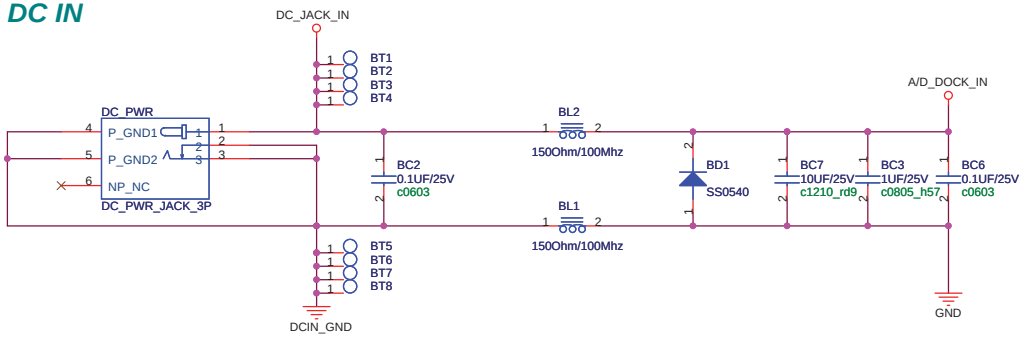

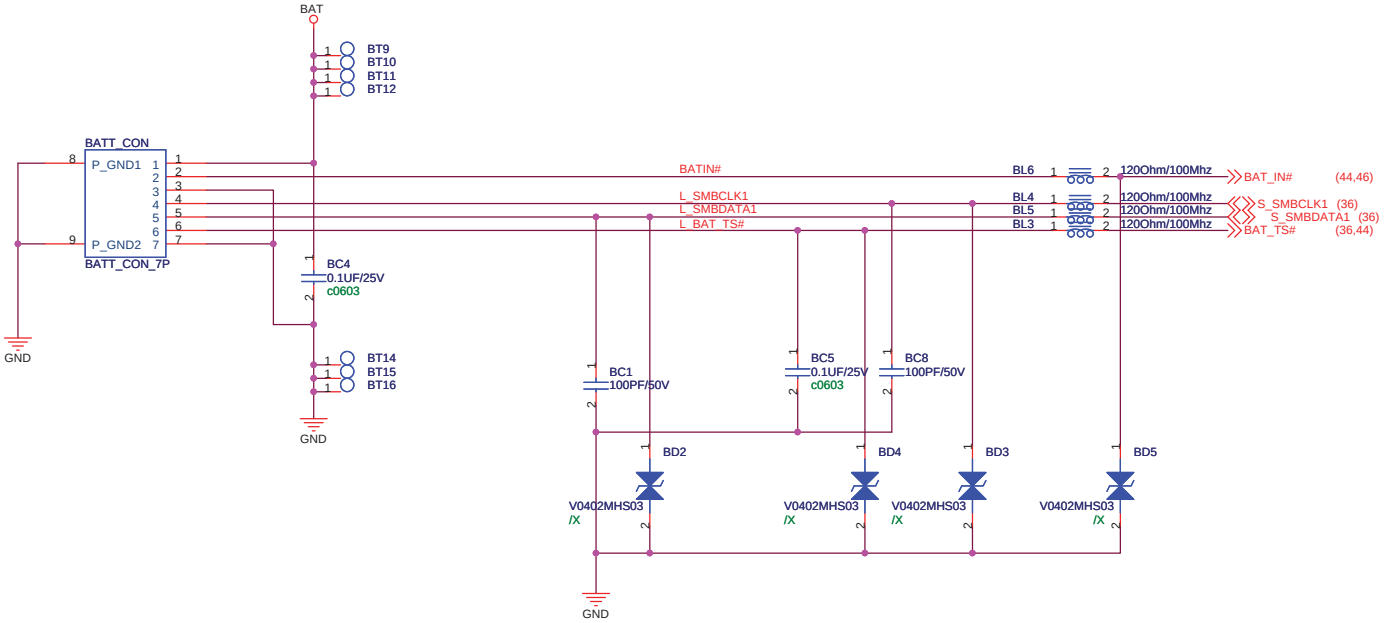

http://hobi-elektronika.net

<Variant Name>

ASUSTek Computer INC.	Title : PWR Jack	
	Engineer: Henry_Yang	
Size A3	Project Name P703	Rev 1.2G
Date: Tuesday, December 09, 2008	Sheet 42 of 51	

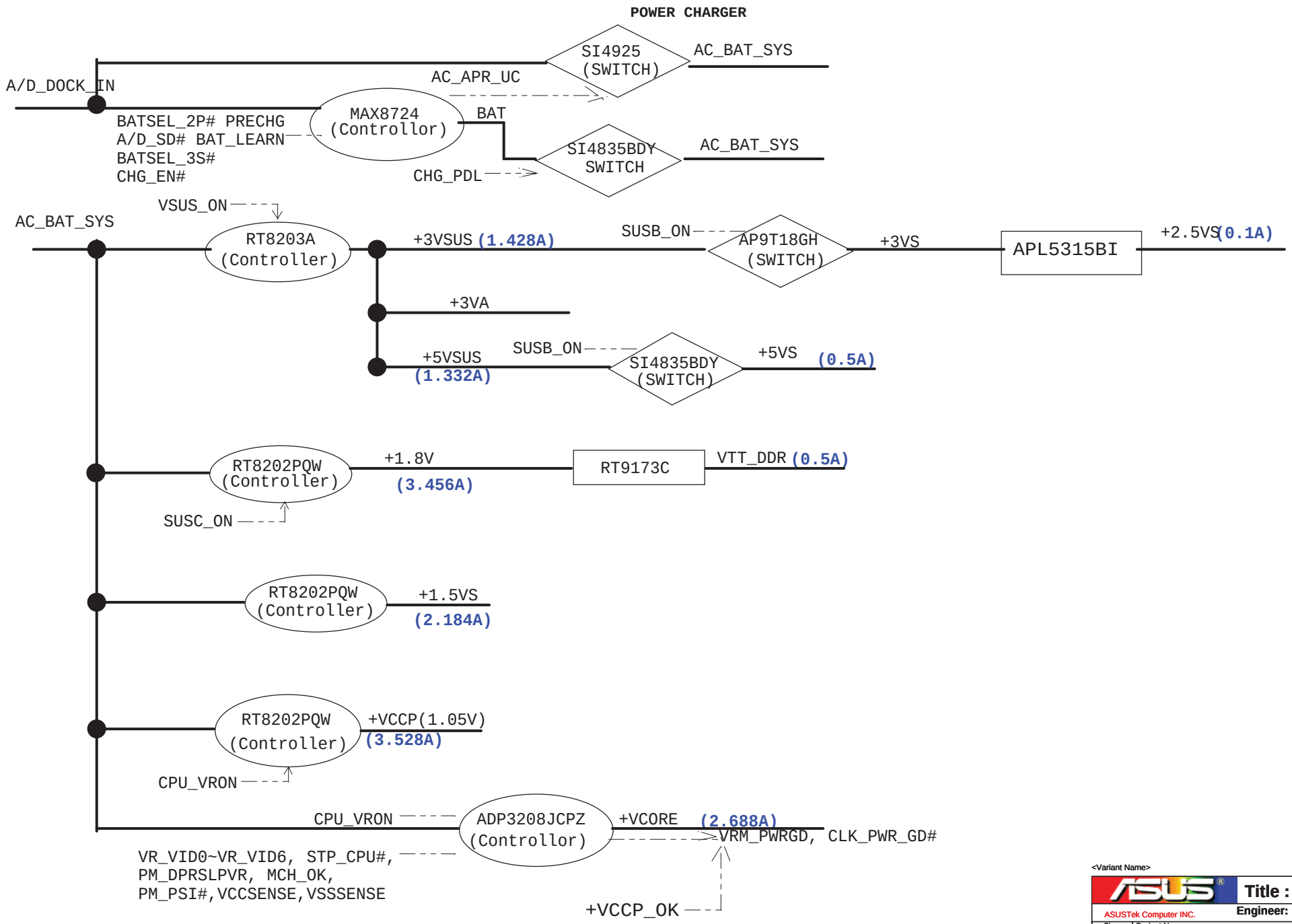

http://hobi-elektronika.net

<Variant Name>

ASUS	Title : Power Flow	
ASUSTek Computer INC.	Engineer: Joy_Zhou	
Size A3	Project Name P703	Rev 1.2G
Date: Tuesday, December 09, 2008	Sheet 43 of 51	

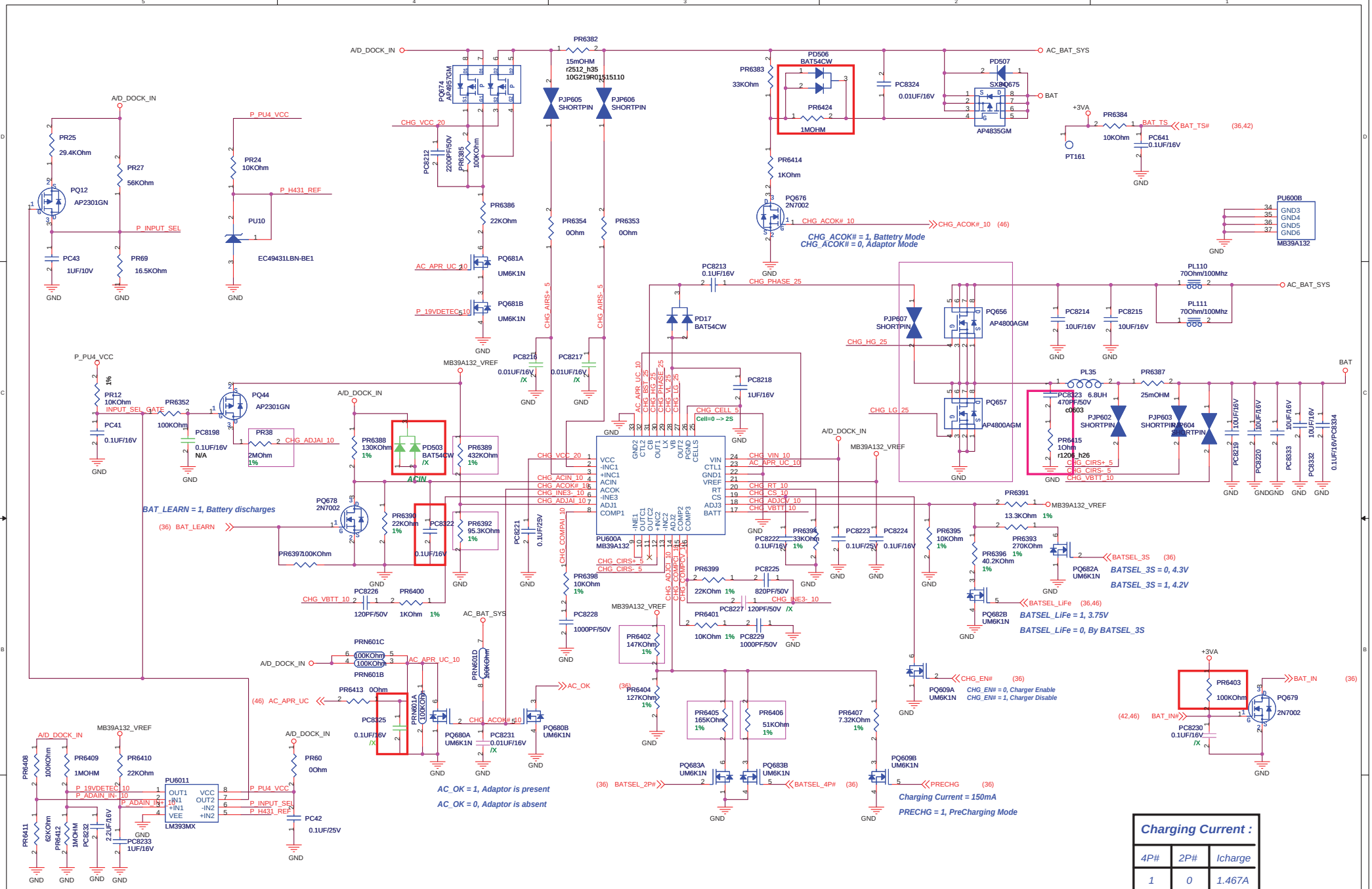

Charging Current :		
4P#	2P#	Icharge
1	0	1.467A
0	1	2.502A
0	0	3.589A

Battery Charging Voltage :
Vadj3 > 4.1V ==> Vbat = 4.2V /cell
2.2V>Vadj3>1.1V ==> Vbat = 2*Vadj3 /cell

Battery Charging Current :
4.4V > Vadj2 >= 0V ==>
Ichg = (Vadj2-0.075)/(25*Rs)

Input Adaptor Max. Current Limit :
Ilimit_current = (Vadj1-0.075) / (25*Rs)

Pre-Charging Mode :
Precharging current = 150mA
Vadj2 = 168.75mV

Adaptor Max. Current :
PR600=235.8K; Ilimit = 2.170A; 20.615W (9.5V/22W)
PR600=185.3K; Ilimit = 2.677A; 32.124W (12V/36W)

ACIN Threshold = 1.25V
Adaptor > 8.63V, System Powered by Adaptor
Adaptor < 8.63V, System Powered by Battery

Prevent Input from 19V :
Adaptor > 13.06V, PQ603B Turn-off
Adaptor < 13.06V, PQ603B Turn-on

Battery Cell Selection :
BAT_ID = 1, 2 Cells; Vadj2 = 0.998V
=> Icharge = 1.477A
BAT_ID = 0, 4/6 Cells; Vadj2 = 1.648V
=> Icharge = 2.517A

VREF = 5.0V
fosc(KHz) = 17000 / RT (KOhm)
Soft start: ts(s) = 0.23 * CS (uF)

VTH of -IN1: 5V / 62 * (100+62) = 13.06V

VTH of ACIN: 1.25V / 25 * (185+25) = 10.5V
Change PR607 and PR608 value

http://hobi-elektronika.net

<Variant Name>

ASUSTek Computer INC.

Title : CHARGER

Engineer: Joy_Zhou

Size	Project Name	Rev
Custom	P903	1.2G

Date: Tuesday, December 09, 2008 Sheet 44 of 51

PRN603C swap to PRN603D
PRN603D swap to PRN603C
12/08

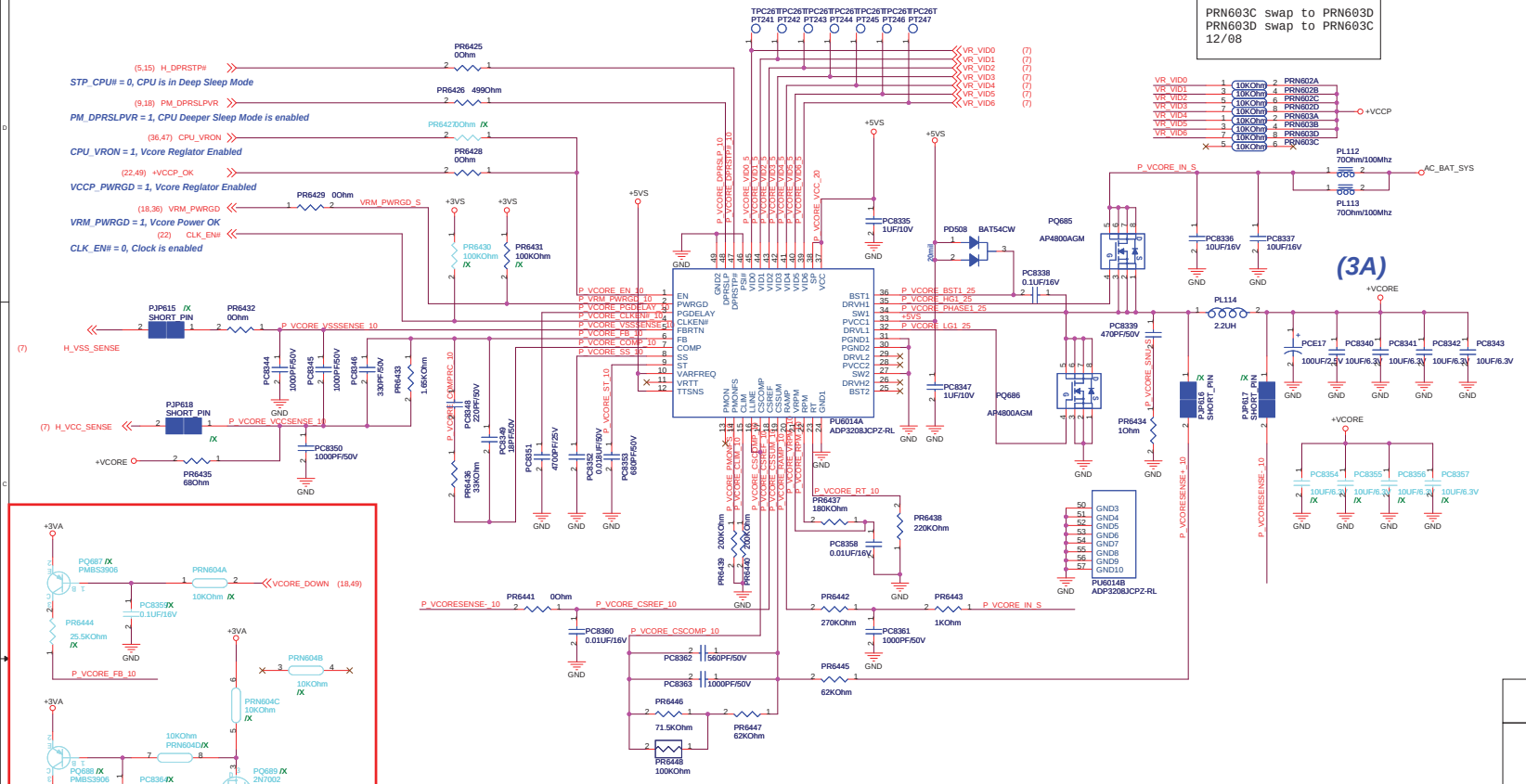

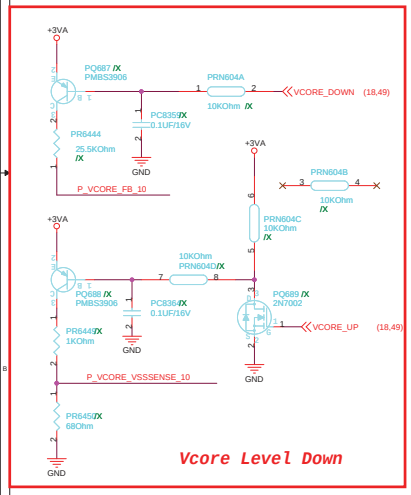

VCORE_DOWN	VCORE_UP	Vcore	Status
L	L	VID-150mV	Power Saving
H	L	VID	Normal
H	H	VID + 200mV	Performance
L	H	VID + 50mV	N/A

Power Stage

1. I/P Current:
   I in = Vo*Io/(0.8 * Vin) =1.95A
2. Ripple Current:
   I rip =3.29A
   I spec=2.5A ⊙2 pcs
3. Dynamic:
   I peak=8.5A
   ESR/2PCS =9 mohm
   〉V =76.5mV
4. Inductor Spec:
   I sat=14 A
   I dc =8 A
   DCR=18 mohm
5. MOSFET Spec:

   H-side MOSFET: RJK0355DPA-00-J0 WPAK

   Rds(ON)= 11.8 mohm (Vgs=4.5 V)
   I cont = 30 A (T =25)
   I peak = 120 A (Pause ≦10 us)

   L-side MOSFET: RJK0355DPA-00-J0 WPAK

   Rds(ON)= 11.8 mohm (Vgs=4.5 V)
   I cont = 30 A (T =25)
   I peak = 120 A (Pause ≦10 us)

Controller

1. Voltage & Current:
   VCORE=0.6-1.2V@8.5A
2. Frequency:
   Set PR58=220Kohm
   Fosc=204KHz for RPM
   Set PR57=180Kohm
   Fosc=333KHz for CCM
3. OCP:
   Set PR60=1MKOHM
   Iocp=33A
4. POR:
   POR Hysteresis =0.15V
   V on =4.4-4.5 V
   V off =4.0-4.2 V
5. UVP:
   VID-300mV
6. OVP:
   VID+200mV
7. Enable Voltage:
   V rising = 4.4V
   V falling = 4.2V
8. Soft start time:
   2.7ms
9. Phase selection:
   SP=VCC
   sigle phase
10. Inrush Current:
   C total = 140uF
   I inrush= 0.056 A
11. Loadline:
   30mOhm

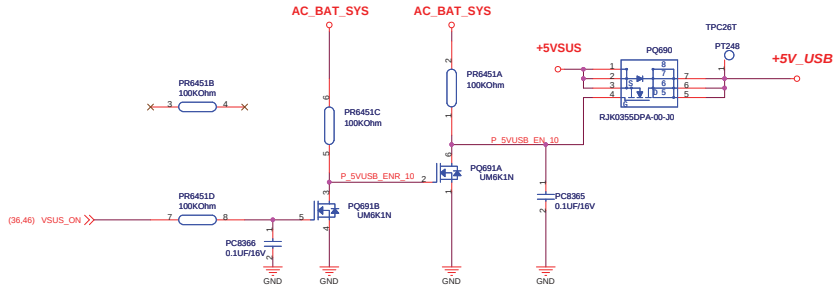

For USB Insert And Remove Protection

http://hobi-elektronika.net

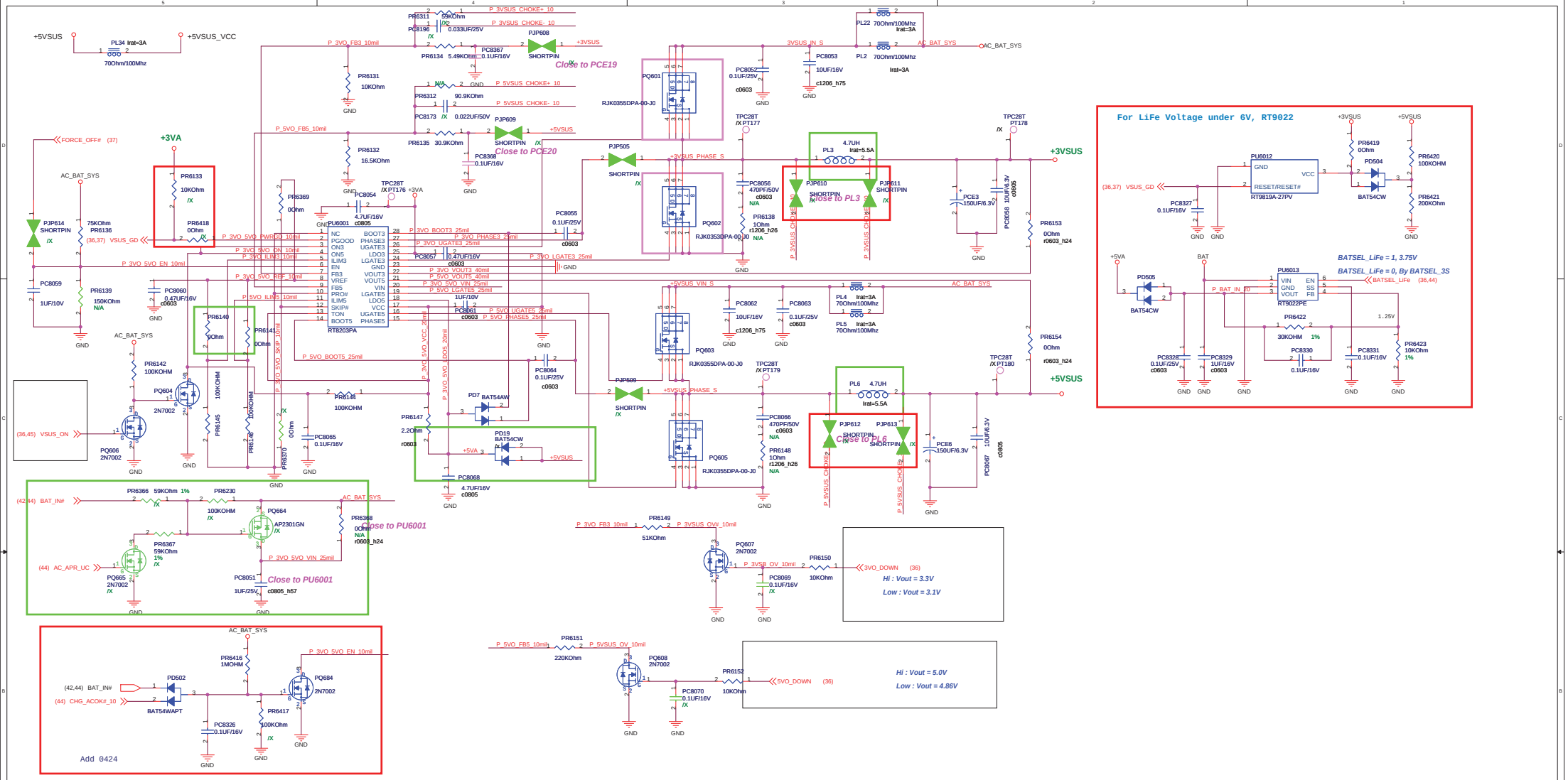

http://hobi-elektronika.net

<Variant Name>

ASUS	Title :	+3VO,+5VO,+3VA
ASUSTek Computer INC.	Engineer:	Joy_Zhou
Size: A2	Project Name: P903	Rev: 1.1G
Date: Tuesday, December 09, 2008	Sheet 46 of 51	

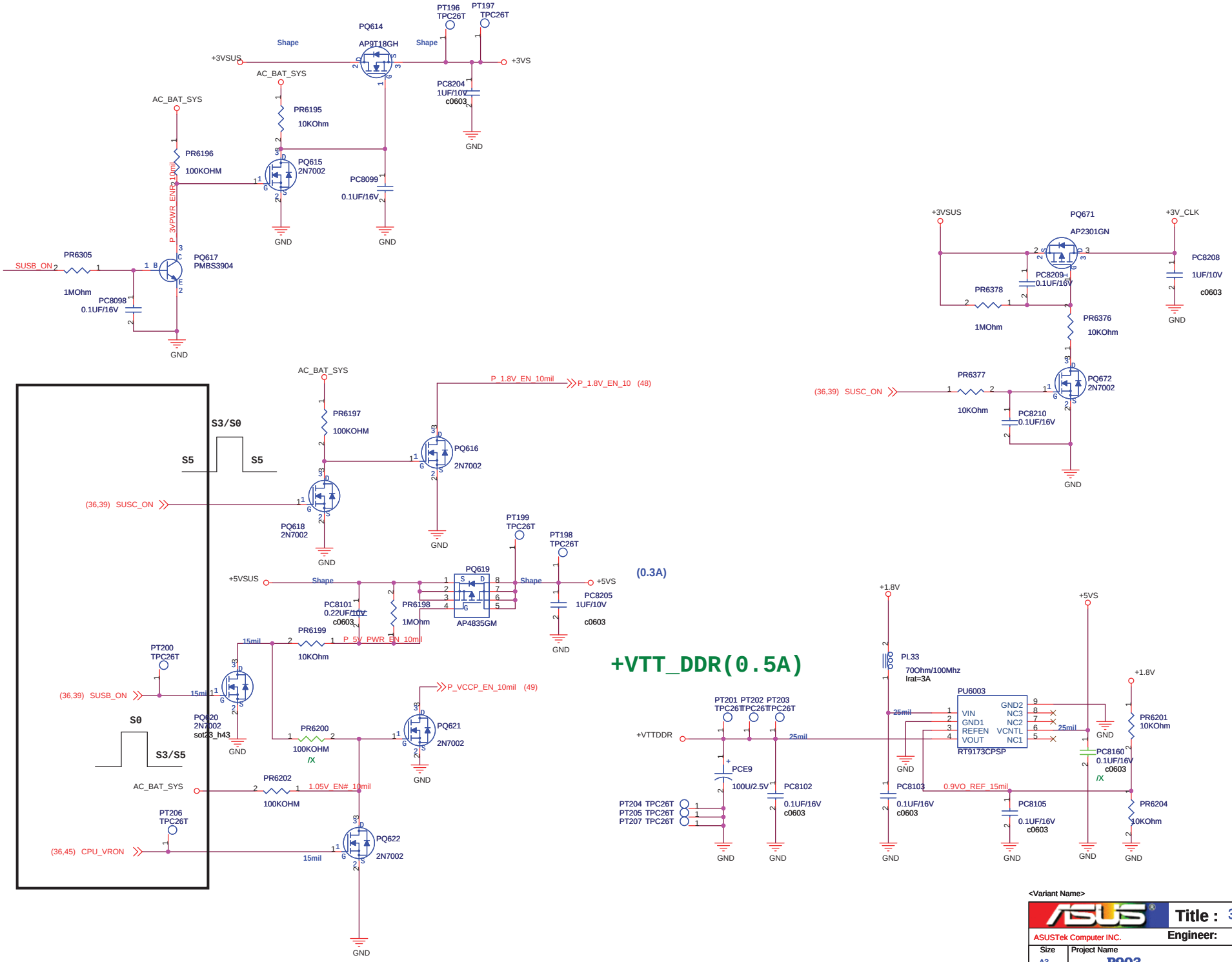

http://hobi-elektronika.net

<Variant Name>

ASUS	Title : 3V_5V_VTT_DDR	
ASUSTek Computer INC.	Engineer: Joy_Zhou	
Size A3	Project Name P903	Rev 1.1G
Date: Tuesday, December 09, 2008	Sheet 47 of 51	

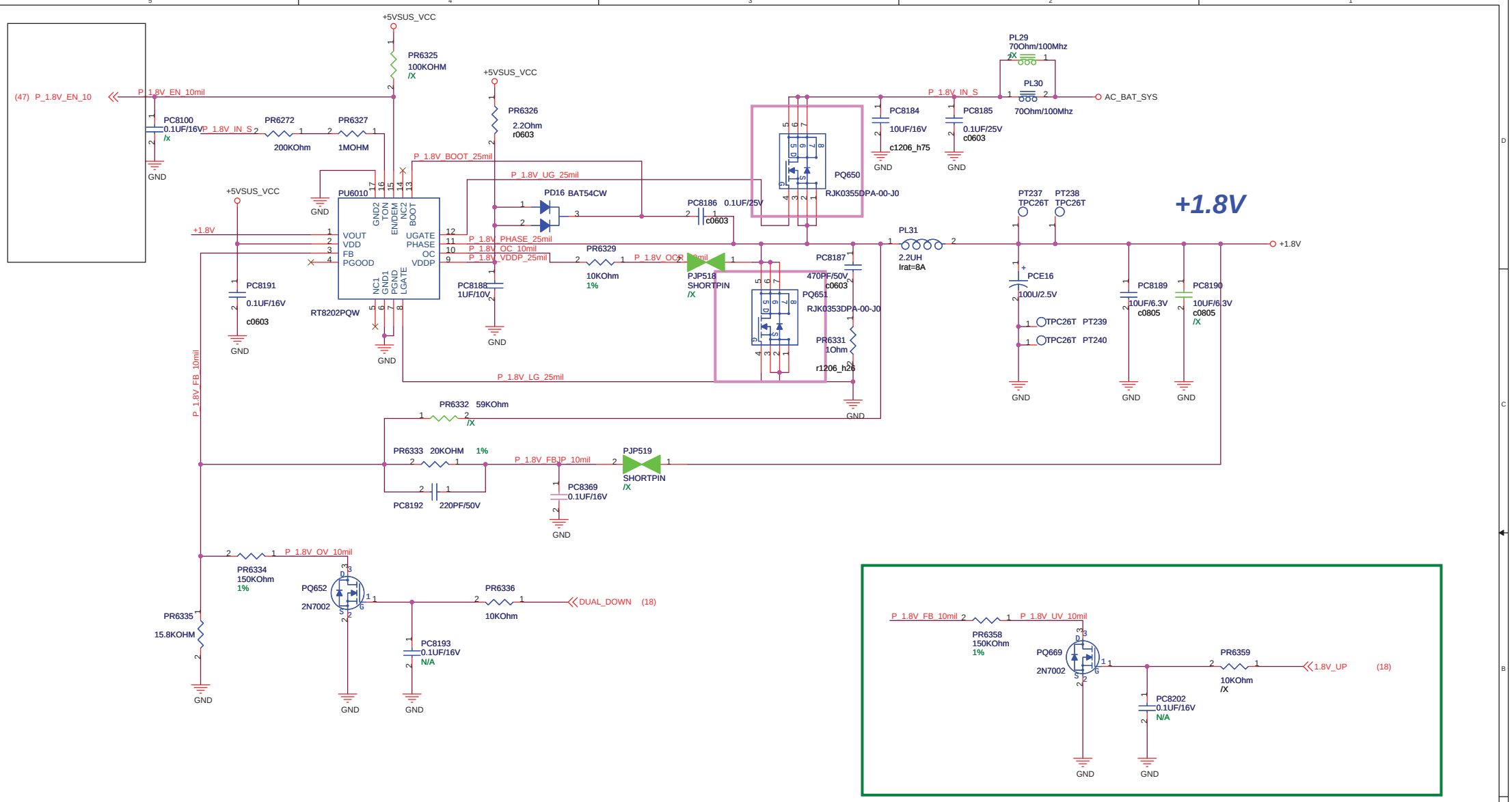

DUAL_DOWN	1.8V_UP	+1.8V
0	0	+1.7V
0	1	+1.8V
1	0	+1.8V
1	1	+1.9V

http://hobi-elektronika.net

<Variant Name>

ASUSTek Computer INC.

Title : +1.8V

Engineer: Joy_Zhou

Size	Project Name	Rev
A3	P903	1.1G

Date: Tuesday, December 09, 2008 Sheet 48 of 51

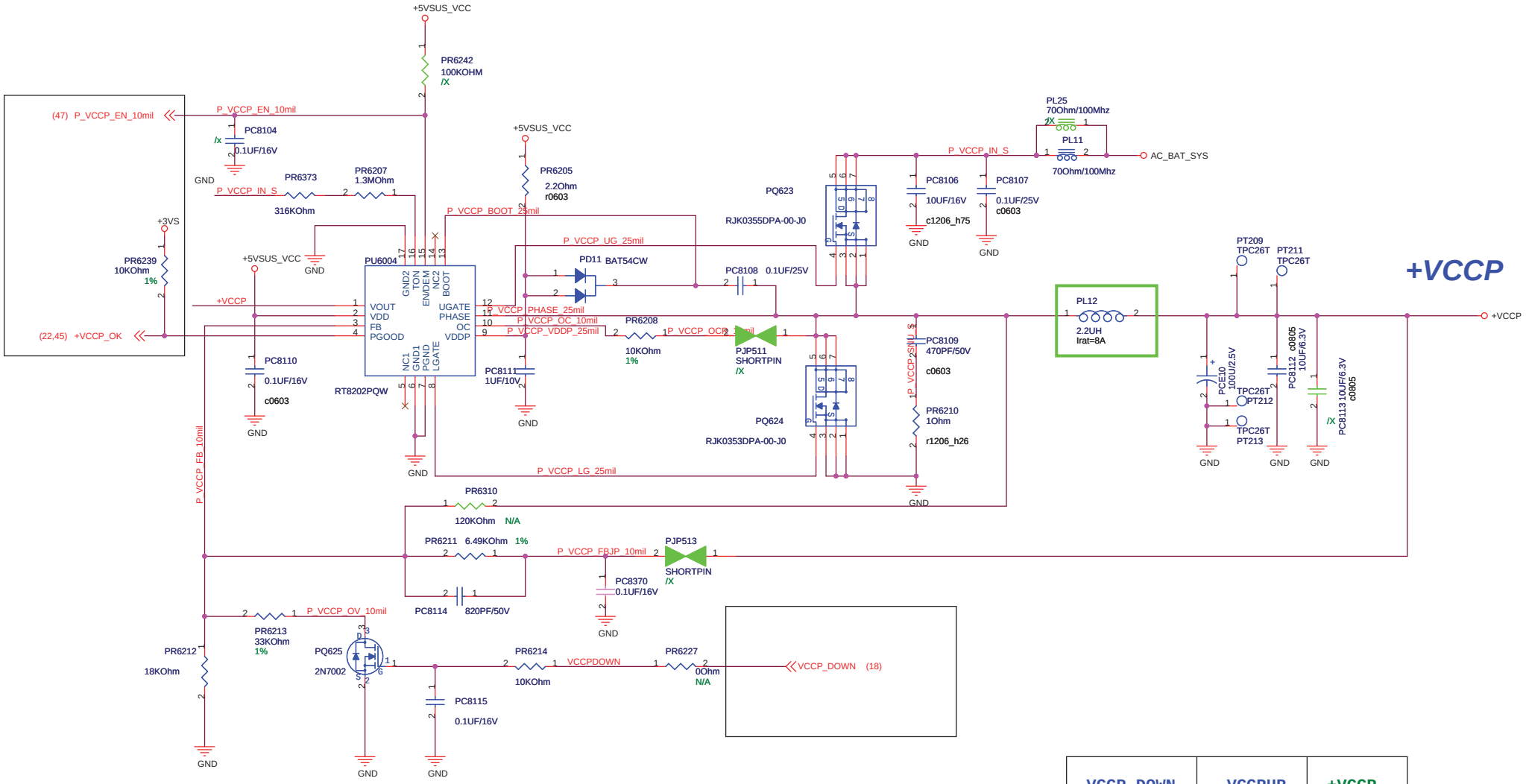

VCCP_DOWN	VCCPUP	+VCCP
0	0	+0.95V
0	1	+1V
1	0	+1.05V
1	1	+1.1V

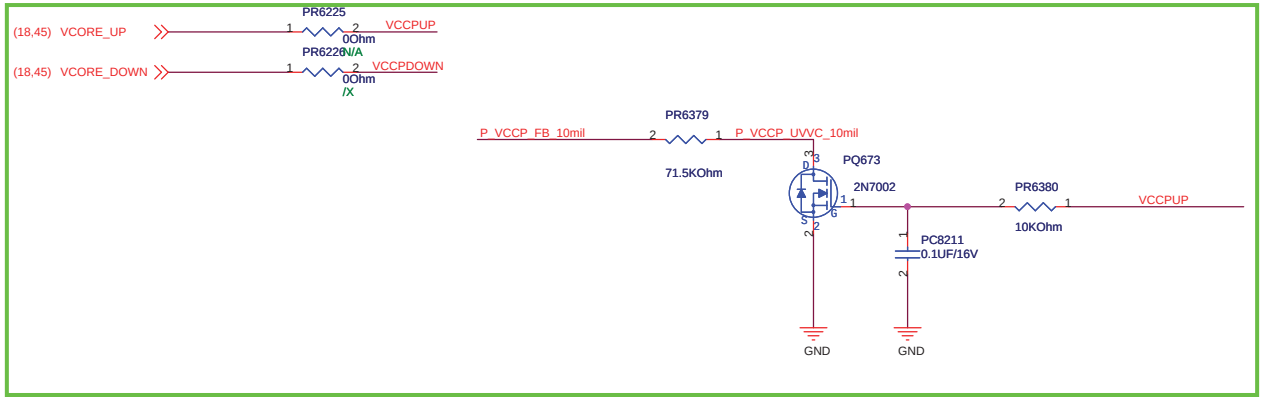

http://hobi-elektronika.net

<Variant Name>

ASUS	Title : VCCP	
ASUSTek Computer INC.	Engineer: Joy_Zhou	
Size A3	Project Name P703	Rev 1.1G
Date: Tuesday, December 09, 2008	Sheet 49 of 51	

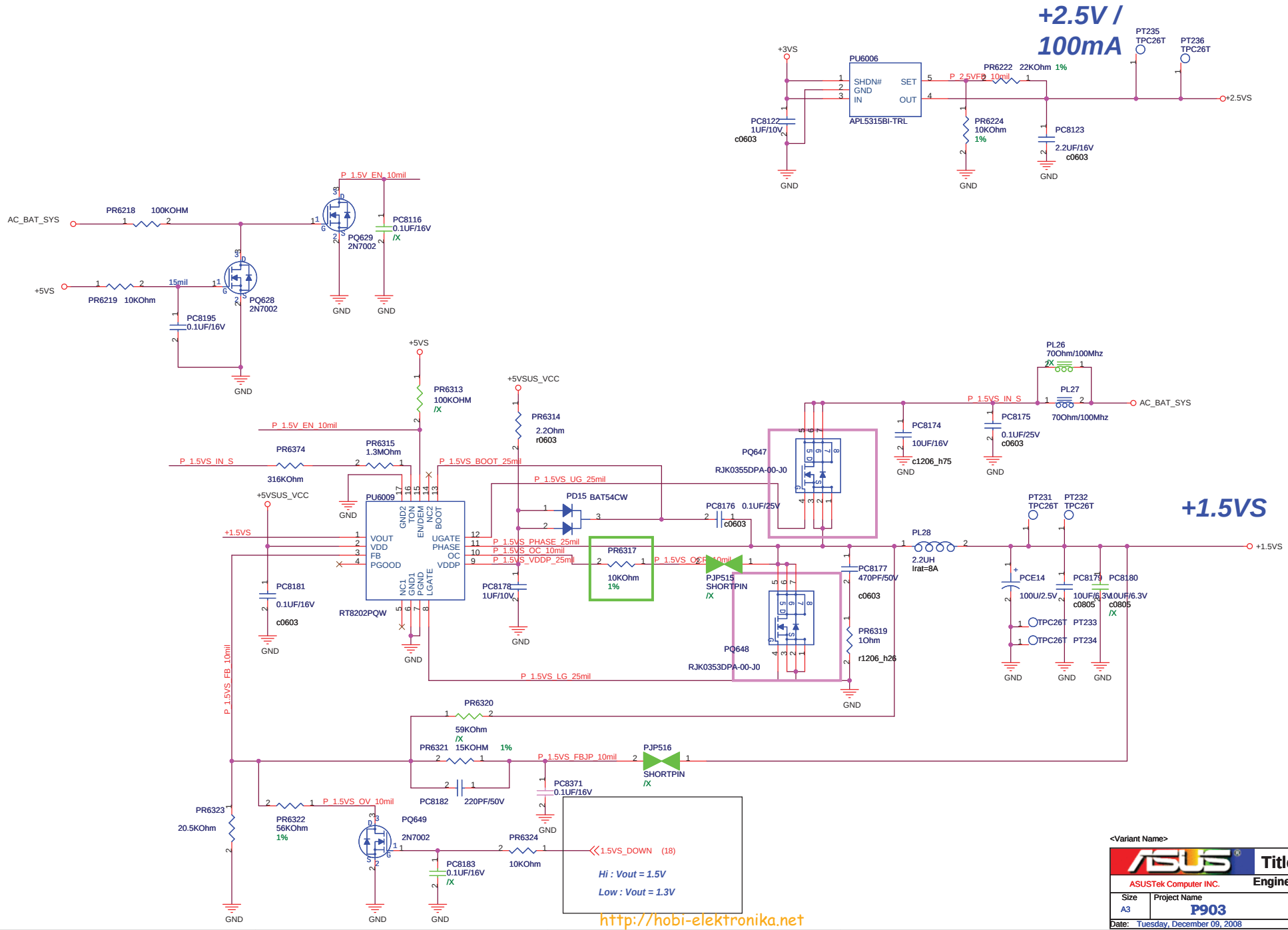

<Variant Name>

ASUS	Title : 1.05V_1.5V_2.5V	
ASUSTek Computer INC.	Engineer: Joy_Zhou	
Size A3	Project Name P903	Rev 1.1G
Date: Tuesday, December 09, 2008	Sheet 50 of 51	

1.Change the Audio Jack.

2.Add BD5 for BAT_IN# ESD, modify the BATIN to BATIN#.

3.Add PM_DPRSLPVR to 945GSE,
if use this signal you need /X NR21

4.Change PR6406 to 51K

5.Change YLED4 to BLUE and change yr6 to 4.7K

6.Change YLED2 to orange&green and add a circuit to support it.

7.Add the circuit of blue tooth on page32

8.Add the circuit to support sata flash module.(sata signal,sata clock and satarbias.)

9.remove modem ang change the lan&modem connector.

10.change HC14 to 10uf and modify HC9 to /X

11.add a dip spi and correlative circuit for RD debug on page36.

12.add a 24pin KB connector on page 38 to compatible with 906

13.change HR4 from 0 ohm to 300 ohm/100MHZ

14.REMOVE 24PIN KB CIRCUIT

15.update power p44-p50

16.add test point pt235 pt236 for 2.5v

17.add gr19 for lcd sense on P24

18.add sys_reset on p37

19,ADD EMI C P40

20.touch pad update

http://hobi-elektronika.net

<Variant Name>

ASUS	Title : modify	
ASUSTek Computer INC.	Engineer: Henry_Yang	
Size A3	Project Name P703	Rev 1.2G
Date: Tuesday, December 09, 2008	Sheet 51 of 51	